CITY OF SOMERVILLE

ORDINANCE NO. _____

IN THE BOARD OF ALDERMEN: _____

AN ORDINACE AMENDING THE SOMERVILLE ZONING ORDINANCE TO ADD A NEW SECTION 6.6: NORTH POINT SPECIAL DISTRICT, MODIFY SECTION 5.4: DESIGN AND SITE PLAN REVIEW, AND MAKE RELATED MODIFICATIONS TO SECTIONS 2, 3, 5, 6, 7, 8 AND 1

WHEREAS, "North Point" is an area over sixty acres in size in total that includes five acres of developable land in Somerville that is physically isolated from the rest of the City by railroad tracks and the MBTA's Boston Engine Terminal and includes three pieces of land that are not contiguous; and,

WHEREAS, without a broad-based development strategy that incorporates the isolated parcels of North Point within Somerville, it is likely that very little development would ever take place independently; and,

WHEREAS, the City of Somerville carried out the North Point Somerville Planning Study in response to a proposal for over 5 million square feet of mixed-use development at North Point in February 2003 and the land remains vacant, underutilized industrial and railroad land that is hidden from the public view and unattractive as a site with a history of illegal dumping; and,

WHEREAS, the current IB zoning would prohibit much of what has been envisioned for this neighborhood from being built; and,

WHEREAS, the proposal establishes regulations supporting the development of a comprehensively planned neighborhood of mixed-use, moderate- to high-density development within easy walking distance to transit;

THEREFORE, be it adopted by the Board of Aldermen, in session assembled, that the below listed sections of the Somerville Zoning Ordinance are hereby adopted and amended as identified and the Zoning Map of the City of Somerville is hereby amended with the changes shown in the attached maps.

PROPOSED ZONING MAP

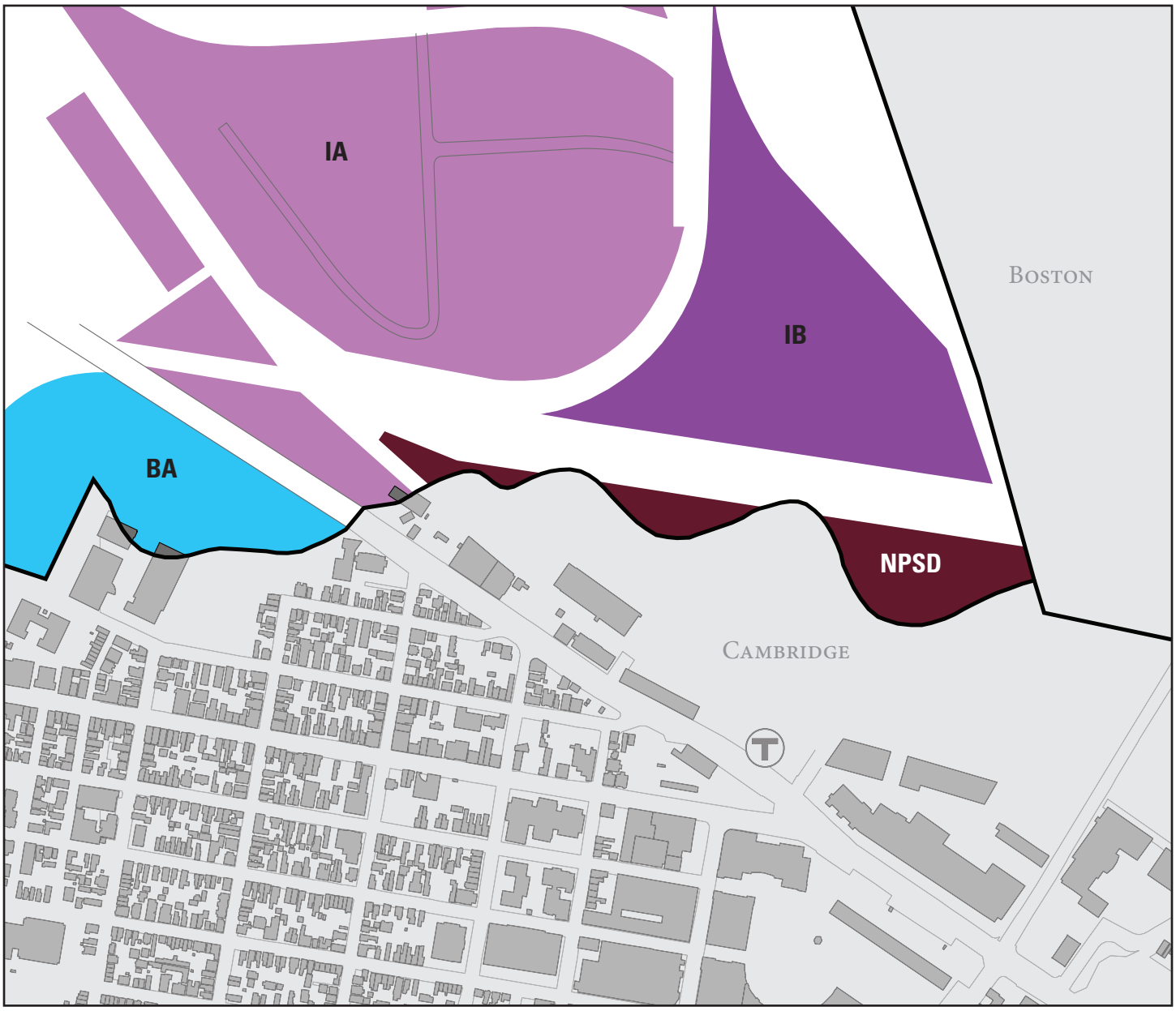

Industrial A - IA

Industrial B - IB

Business A - BA

North Point Special District - NPSD

SOMERVILLE ZONING ORDINANCE

(Text that is removed is ~~crossed out in red~~, additions are underlined, and comments are provided in green)

ZONING TABLE OF CONTENTS

PART III
ZONING ORDINANCE

Art 5.	~~Special Permits, Special Permits with Site Plan Review, Site Plan Approval and Variances~~ Administration	ZON 5:1
Ch. 6.	Rules and Regulations Pertaining to Design and Site Plan ~~Approval~~ Review	ZONRR: 39

ARTICLE 2

2.2.6.a **Allee.** Objects placed in a straight line.

2.2.6.b **Amenity Space Private.** Features of a building and/or outdoor areas designed for the comfort and/or convenience of residents.

2.2.6.c **Amenity Space, Shared.** Rooms and/or facilities designed for the comfort and/or convenience of residents of a multi-unit building.

2.2.17.a **Blank wall.** A portion of any facade of a building that does not include a substantial material change; windows, doors, columns, pilasters or other articulation greater than twelve (12) inches in depth.

2.2.17.b **Block.** The aggregate land area circumscribed by thoroughfares or other rights-of-way.

2.2.17.c **Block Face.** The aggregate of all primary front lot lines, or alternatively the building facades, on one side of a block.

2.2.20.2 **Build-to Line.** A maximum, parallel distance recessed from a frontage line where a building facade must be built.

2.2.28.a **Civic Space.** An outdoor space designed for social and recreational activities.

2.2.29.a **Close.** a one-way thoroughfare surrounding a civic space providing vehicular access to abutting lots.

2.2.30.b **Commercial Building.** A building type limited to commercial uses.

2.2.30.a **Commercial High-Rise.** A high-rise building type limited to commercial uses.

2.2.32.a **Corridor Building.** A residential building type composed of apartments/condos down one or both sides of a central hallway.

2.2.34.a **Design and Site Plan.** A document illustrating compliance to the applicable provisions of a specific district in this Ordinance.

2.2.34.b **Desire Line.** A route that pedestrians prefer to take to get from one location to another.

2.2.37. **Development Site.** The land area encompassed in a development proposal irrespective of the number or configuration of lots, land ownership, and/or municipal boundaries, and/or municipal boundaries. ~~A development site may include land in more than one (1) ownership or city.~~

2.2.37.a **Dog Park.** A civic space type designed for the recreation of dogs and their owners.

2.2.52.a **Facade.** The exterior wall of a building oriented in whole or in part toward a front lot line.

2.2.52.b **Facade Build-out** The minimum width a facade must be built within a setback area or in relation to a build-to line.

2.2.56.a **Fenestration.** The design and placement of windows on a building.

2.2.59.a **Floor Plate.** The total gross floor area of a single story of a building, excluding balconies.

2.2.66.a **High-Rise.** Any building taller than seventy (70) feet above mean grade.

2.2.85. **Lot.** A ~~single parcel~~ bounded area of land ~~under one (1) ownership~~ with appropriate frontage on and undivided by a ~~street or~~ public way~~, with definite boundaries as indicated by recorded deed or plan and used or set aside and available for use as the site of one (1) or more principal and accessory uses~~ intended for improvement through development as a building site. ~~Parcels constituting a lot for Planned Unit Development may be separated by a street, public, or private way, but must be otherwise contiguous.~~

2.2.92. **Lot Line.** ~~A line that divides one (1) lot from another, or from a street or other public space.~~ The boundary that legally and geometrically demarcates a lot or parcel of land.

2.2.92.a **Lot Line Adjustment.** Reconfiguration of the boundary line between two adjacent lots or parcels of land, whether they are commonly owned or not, and whether the resulting shift of ground from one parcel to another is minor or substantial.

2.2.93. **Lot Line, Front.** The ~~property~~ lot line ~~dividing~~ bordering ~~a lot from a street~~ thoroughfare right-of-way. ~~In the case of a corner lot the owner shall have the option of choosing which of the two (2) corner lot lines is to be considered the~~

~~front lot line.~~ Lots with multiple front lot lines shall designate one front lot line as the primary front lot line, with all remaining front lot lines designated as secondary front lot lines.

2.2.95.a **Lot Merger.** The consolidation of two (2) or more adjacent lots or parcels of land and resulting elimination of the lot lines that previously separated them.

2.2.95.b **Lot Split.** The division of a lot or parcel of land into two (2) smaller lots or parcels of land.

2.2.97.a **Master Plan.** a document providing a basis for decision making regarding the long-term physical development of the City of Somerville.

2.2.98 **Mixed-Use Building.** A building type ~~intended and designed to be used for~~ with at least two (2) ~~separate~~ vertically stacked uses ~~as described in Article 7~~ where the ground floor is limited to commercial activity.

2.2.102.a **Neighborhood Development Plan.** A document illustrating compliance to the applicable neighborhood and thoroughfare provisions of a specific district in this Ordinance.

2.2.105.a **North-Facing.** Within 45 degrees of due north.

2.2.118.a **Parking Structure, Lined.** A parking structure setback from the front lot line by rowhouses, corridor residential, or commercial uses.

2.2.124.a **Plaza.** A civic space type designed for civic purposes and commerical activities, integrated as part of a block/ lot or located internal to a block/lot, with landscape consisting primarily of pavement.

2.2.124.b **Pocket Park.** A civic space type designed for unstructured recreation, integrated as part of a block/lot or located intenal to a block/lot, consisting of greenery and a place to sit outdoors for adults, and spatially defined by surrounding buildings.

2.2.124.c **Podium.** The lower portion(s) of certain high-rise buildings, limited in height and designed to minimize the impact of wind flows redirected by adjoining towers and to spatially define the public realm of nearby thoroughfares, private-owned public spaces, and civic spaces.

2.2.124.d **Point Tower.** A residential building type composed of apartments surrounding a central elevator core.

2.2.130.a **Public Common.** A civic space type for unstructured recreation, free standing in the block pattern with landscape consisting of lawns, paths, and trees.

2.2.131.a **Public Square.** A civic space type for unstructured recreation and civic purposes, free standing in the block pattern, with landscape consisting of formally disposed lawns, paths, and trees.

2.2.136.a **Residential High-Rise.** A high-rise building type limited to residential uses on the upper floors.

2.2.143.a **Setback Area.** The land area of a lot between a minimum and maximum setback or build-to lines.

~~**2.2.146**~~ ~~**Site Plan Approval.** A process providing for public review and approval of development plans within certain zoning districts of the City where dimensional and design standards are set forth which supersede the normally applicable standards.~~ DELETED

2.2.163. **Subdivision.** ~~All~~ The division~~s~~ of a tract or parcel of land into two (2) or more lots, building sites, or other divisions for the purpose~~, whether immediate or future,~~ of sale, legacy, or development at any time, ~~and including all division of land in which~~ where a new ~~street~~ thoroughfare or ~~access~~ way is needed to provide access to ~~a~~ the lots(s) ~~parcel(s)~~ which would otherwise be landlocked. ~~or involve a change in existing streets and access ways. Subdivision shall also include resubdivision and, where appropriate, the process of subdividing and the land area subdivided.~~

2.2.164.b **Terminated Vista.** A location at the axial conclusion of a thoroughfare.

2.2.164.c **Thoroughfare.** A way for use by vehicular and pedestrian traffic and providing access to lots and open spaces.

2.2.165.a **Tower.** Any portion of a high-rise building above the podium.

2.2.173.a **Waiver.** A predetermined type of deviation, within specific limitations, from the block, lot, and/or thoroughfare provisions for of a specific district in this Ordinance.

ARTICLE 3

3.2.5. Special Permits, Special Permits with Site Plan Review, and Variances. An application for a special permit, special permit with site plan review, design and site plan ~~approval~~ review or petition for variance over which the Board of Appeals exercises original jurisdiction shall be filed by the petitioner with the City Clerk, as specified by the procedures in Article 5. (Ord. No. 2011-02, § 4, 2-10-2011)

(Insert Appendix A)

ARTICLE 5

ZON 5:1

ARTICLE 5. ~~SPECIAL PERMITS, SPECIAL PERMITS WITH SITE PLAN REVIEW, SITE PLAN APPROVAL AND VARIANCES~~ ADMINISTRATION

Sec. 5.4. Design and Site Plan ~~Approval~~ Review.

ZON 5:3

ARTICLE 5. ~~SPECIAL PERMITS, SPECIAL PERMITS WITH SITE PLAN REVIEW, SITE PLAN APPROVAL AND VARIANCES~~ ADMINISTRATION

ZON 5:21

SECTION 5.4. DESIGN AND SITE PLAN ~~APPROVAL~~ REVIEW

(Insert Appendix B)

ZON 5:27

(Insert Appendix C)

ARTICLE 6

ZON 6:5

6.1.9. IB - Industrial Districts.
Purpose. To establish and preserve areas for necessary industrial and related uses of such a nature that they require isolation from many other kinds of land uses, and to make provision for commercial uses which are necessary to service the immediate needs of people in these areas. All new development for a by-right use in the IB District shall be subject to Design and Site Plan ~~Approval~~ Review (DSP~~A~~R) under Section 5.4. If some uses in the development are by right and some are allowed by Special Permit (SP) the entire development shall be subject to SPSR review. (Ord. No. 2009-14, § 1, 11-12-2009)

ZON 6.7

5. A detailed landscape plan shall be submitted as a part of design and site plan ~~approval~~ review for development in the Waterfront Overlay District, at the same scale as the submitted site plan. Special emphasis shall be given to designing and implementing landscape improvements and Usable Open Space along the Mystic River side of the property. It is intended that landscaping soften the impact of buildings and paved areas as seen from the river, adjacent public open space, and adjacent vehicular thoroughfares. Landscaping utilizing indigenous or naturalized plant materials is encouraged.

ZON 6.13

2. By-Right Uses. All new development for a by-right use shall be subject to Design and Site Plan ~~Approval~~ Review (DSP~~A~~R) under Section 5.4. If some uses in the development are by right and some are allowed by Special Permit (SP) the entire development shall be subject to SPSR review.

ZON 6.19

2. By-Right Uses. All new development for a by-right use shall be subject to Design and Site Plan ~~Approval~~ Review (DSP~~A~~R) under Section 5.4. If some uses in a new development are permitted by right and some are allowed by Special Permit (SP) the entire development shall be subject to SPSR review.

ZON 6.51

2. By-Right Uses. All new development for a by-right use shall be subject to Design and Site Plan Approval (DSPA) under Section 5.4. If some uses in the development are by right and some are allowed by Special Permit (SP) the entire development shall be subject to SPSR review.

ZON 6.62

(Insert Appendix D)

ARTICLE 7

ZON 7:34.1

18. All new development for a by-right use in the IB District shall be subject to Design and Site Plan ~~Approval~~ Review (DSP~~A~~R) under Section 5.4. If some uses in the development are by right and some are allowed by Special Permit (SP) the entire development shall be subject to SPSR review. (Ord. No. 2009-14, § 3, 11-12-2009)

ARTICLE 8

ZON 8:1

~~**Sec. 8.8. Site Plan Approval for Subdivisions**~~.

ZON 8:13

~~**Section 8.8. Site Plan Approval for Subdivisions.**~~
~~The subdivision of any parcel of land shall be subject to Site Plan Approval under the procedure set forth in Section 5.4 herein.~~

ARTICLE 17

SECTION 17.2. APPLICABILITY

~~The provisions of this Article shall apply only through application for special permits, special permits with site plan review, or planned unit developments, and only when specifically cited by or referenced in another section of this Ordinance as applicable.~~ This section is only applicable as specifically referenced elsewhere in this Ordinance.

APPENDIX A

Insert into Article 3 as Section 3.5

3.5 PLANNING BOARD

3.5.1 Intent

A. This section establishes the organizational structure, operational rules, and scope of services of the City of Somerville Planning Board as authorized by M.G.L. Chapter 41, Section 81A-81J, as amended, and Chapter 2, Article 5, Division 5 of the City of Somerville Code of Ordinances.

3.5.2 Purpose

A. The Planning Board shall serve as a SPECIAL PERMIT GRANTING AUTHORITY (SPGA) and/or review board as specifically authorized elsewhere in this Ordinance.
B. The Planning Board or its designee shall author and periodically update a Master Plan for the City of Somerville per MGL 41, 81D.
C. The Planning Board or its designee may develop an official map of the City of Somerville per MGL 41, 81E-J.
D. The Planning Board shall provide an advisory role, as required or as requested from time to time, including but not limited to in the following circumstances:
   1. to provide recommendations to the Board of Aldermen concerning proposed amendments to the Somerville Zoning Ordinance;
   2. to conduct an economic and housing market needs assessment and provide recommendations to the Board of Aldermen concerning any necessary amendments to the Inclusionary Housing Ordinance;
   3. to provide recommendations to the appropriate SPGA on the appropriateness of any State or Federal housing affordability guidelines that might be adopted in the Rules and Regulations of the SPGA as an alternative to those enacted in Article 13;
   4. to provide recommendations to the Board of Aldermen concerning recalculation of the Project Mitigation Linkage Fee based on consideration of the current impact of new commercial development on the cost and supply of affordable housing in the City (see Article 15: Linkage);
   5. to provide recommendations to the Board of Aldermen concerning changes or additions to the official map of the City of Somerville.
   6. to provide recommendations to the Board of Aldermen, in the absense of an official map, concerning the laying out, alteration, relocation, or discontinuance of public ways and statutory private ways.

3.5.3 Membership

A. The Planning Board shall consist of five (5) members and two (2) associate members, appointed by the Mayor and subject to confirmation by the Board of Aldermen.
B. Members of the Planning Board shall be appointed for five-year terms and associate members for two-year terms.
C. When first established, terms of the initial appointees shall be shortened in a manner where the terms of one (1) member and one (1) associate member expire annually.
D. The Planning Board, subject to appropriation and subject to the approval of the Mayor, may employ such technical and other assistants as may be necessary to perform its duties.

3.5.4 Board Rules

A. The board shall elect a chairman and a clerk on an annual basis from among its own number.
B. The chairman of the Planning Board shall designate an associate member to sit in the place of any member incapacitated by personal interest, inability to act, or absence when necessary.
C. The Planning Board or its designee shall keep minutes of its proceedings.
D. The Planning Board and may adopt rules of procedure and policy as it may deem necessary to conduct its affairs, including but not limited to the following subjects:
   1. rules and procedures governing applications and fees, including required written and graphical information;
   2. rules and procedures pertaining to the design and site plan review process;
   3. rules and procedures establishing a minor class of project types not requiring comprehensive review or a public hearing, but still deserving of plan submittal; and
   4. rules and procedures for SUBDIVISION, LOT SPLITS, LOT MERGERS, and LOT LINE ADJUSTMENTS.
E. The adoption or amendment of rules of procedure and policy shall require a public hearing to receive comments from the public. The public hearing shall be advertised once in a newspaper of local circulation, at least fourteen (14) days prior to the date of the public hearing.

APPENDIX B

Delete Section 5.4 and replace with the following

5.4 DESIGN AND SITE PLAN REVIEW

5.4.1 Applicability

D. This section is only applicable as specifically referenced elsewhere in this Ordinance.

5.4.2 Purpose

A. DESIGN AND SITE PLAN review allows for verification that applicable provisions are being met for the specific districts where the DESIGN AND SITE PLAN review process is authorized for the following:
   1. new construction;
   2. the alteration, reconstruction, extension, or structural changes of existing structures;
   3. the use or change in use of land or structures; and,
   4. SUBDIVISION, LOT SPLITS, LOT MERGERS, and LOT LINE ADJUSTMENTS.

5.4.3 Authority

A. The Planning Board shall serve as the review board for all DESIGN AND SITE PLAN applications.

5.4.4 Submission

A. DESIGN AND SITE PLANS shall be submitted to the office of the City Clerk with the appropriate application forms and accompanied by written and graphic information as required.
B. Upon written request by an applicant, the Planning Board may, in its discretion, waive any of the information required as part of a DESIGN AND SITE PLAN submittal.
C. DESIGN AND SITE PLAN applications may be submitted simultaneously with any required SPECIAL PERMIT or VARIANCE applications (see §5.4.5.B.).

5.4.5 Review

A. The Planning Board shall hold a public hearing on a DESIGN AND SITE PLAN application within sixty-five (65) days of the date of official filing in the office of the City Clerk, and shall take final action on the application within ninety (90) days of the date of the official filing, unless there is written mutual agreement by the Applicant and Board to an extension of these time periods (see 5.4.5.C below). Public notice of the hearing shall be provided to parties in interest (see Article 2 for definitions), in accordance with the procedures set forth in M.G.L. Chapter 40A, Section 11, as amended.
B. The applicant may grant permission for the Planning Board to extend the required time frame before which the Planning Board must provide notice and open a public hearing.
C. The period within which final action shall be taken by the Planning Board may be extended for a definite period by mutual consent of the Planning Board and the applicant.
D. In the event the Planning Board determines that the plans and information of the submitted site plan or presented to it at the public hearing are inadequate to permit the Board to make an adequate finding and determination, at its discretion, instead of denying the application, it may:
   1. Adjourn the hearing to a later date to permit the applicant to submit a revised plan and/or further information, provided, however, that such adjournment shall not extend the ninety (90) day period within which final action must be taken by the Board, unless said period is extended to a day certain by mutual consent. In such case, the applicant shall bear the cost of re-advertising the continuance and re-notification of the property owners; or
   2. Grant a leave to withdraw without prejudice so that the applicant may submit a revised application which shall not be considered as a repetitive petition. Such revised application shall be treated as a new submission.

5.4.6 Findings and Compliance

A. The Planning Board shall approve a DESIGN AND SITE PLAN upon making positive findings as indicated for the specific district where the DESIGN AND SITE PLAN review process is authorized.
B. The Planning Board may reject a DESIGN AND SITE PLAN only when:
   1. the submittal fails to furnish adequate information required for review;
   2. the imposition of reasonable conditions would not ensure compliance to standards, as applicable; and/or
   3. the submittal, although proper in form, includes or creates an intractable problem so intrusive on the needs of the public in one regulated aspect or another and cannot be adequately mitigated.
C. The Planning Board may require the posting of a bond or other performance guarantee to assure compliance with the

DESIGN AND SITE PLAN and/or conditions, as approved.

5.4.7 Conditions

A. The Planning Board may attach conditions and/or limitations to the approval of any DESIGN OR SITE PLAN it deems necessary in order to ensure compliance to the findings and/or standards as required for the specific district the DESIGN AND SITE PLAN review process is authorized, and including but not limited to consideration of the following:
   1. integration of the project into the existing terrain and surrounding landscape to preserve natural features and minimize the removal of trees, site grading, soil removal, and the blasting of rock;
   2. preservation of scenic views from civic spaces;
   3. minimization of shadows and unreasonable glare cast upon civic spaces and neighboring properties;
   4. implementation of measures to prevent the pollution of surface and groundwater, minimize erosion and sedimentation, maintain or recharge groundwater levels, reduce the amount and velocity of surface run-off, and minimize the potential for flooding.
   5. screening of storage areas, machinery, service areas, truck loading areas, utility buildings and structures and other unsightly uses.

5.4.8 Revisions

A. Proposed revisions to an approved DESIGN AND SITE PLAN shall be submitted to the Planning Director.
B. The Planning Director shall determine if the proposed revision is equivalent to a minor or major amendment to the previously approved DESIGN AND SITE PLAN within five (5) business days of receipt of a revised DESIGN AND SITE PLAN APPLICATION.
   1. Upon a determination that the proposed revision is a minor amendment, the Planning Director shall approve or deny the proposed revisions in writing. Upon denial, the applicant may appeal the decision of the Planning Director to the Planning Board.
   2. Upon a determination that the proposed revision is a major amendment, the Planning Director shall notify, in writing, the applicant and the Planning Board of the determination and the applicant shall submit the proposed revisions to the Planning Board as a new DESIGN AND SITE PLAN submission according to the requirements of §5.4.4.
C. When considering a revised DESIGN AND SITE PLAN application, review by the Planning Board shall be limited to the proposed revision to the previously approved plan.

APPENDIX C

Insert into Article 5 as Section 5.7

5.7. NEIGHBORHOOD DEVELOPMENT PLAN REVIEW

5.7.1. Applicability

A. This section is only applicable as specifically referenced elsewhere in this Ordinance.

5.7.2. Purpose

A. The NEIGHBORHOOD DEVELOPMENT PLAN review process allows for verification that applicable provisions are being met for the specific districts where the NEIGHBORHOOD DEVELOPMENT PLAN review process is authorized for the following:
   1. the pattern of land SUBDIVISION, including the size of BLOCKS and the frontage of LOTS;
   2. the alignment, connectivity, and lane geometry of THOROUGHFARES;
   3. the allotment and distribution of CIVIC SPACES;
   4. the proposed development build-out;
   5. the circulation patterns of vehicular and pedestrian movement;
   6. and the functionality of neighborhood serving utilities for DEVELOPMENT SITES.

B. The NEIGHBORHOOD DEVELOPMENT PLAN review process provides an applicant with the opportunity to submit a plan illustrating the basic components of a neighborhood without preparing detailed site plans or architectural and engineering drawings for THOROUGHFARES, CIVIC SPACES, and/or buildings that can be approved at a later date as project phases and individual LOTS are built out.

5.7.3. Authority

A. The Planning Board shall serve as the review board for all NEIGHBORHOOD DEVELOPMENT PLAN applications.

5.7.4 Submission

A. NEIGHBORHOOD DEVELOPMENT PLANS shall be submitted to the office of the City Clerk with the appropriate application forms and accompanied by written and graphic information as required.

B. Upon written request by an applicant, the Planning Board may, in its discretion, waive any of the information required as part of a NEIGHBORHOOD DEVELOPMENT PLAN submittal.

C. NEIGHBORHOOD DEVELOPMENT PLAN applications may be submitted simultaneously with any required SPECIAL PERMIT or VARIANCE applications (see §5.7.5.B.).

5.7.5 Review

A. The Planning Board shall hold a public hearing within sixty-five (65) days of the date of official filing of a NEIGHBORHOOD DEVELOPMENT PLAN application with the office of the City Clerk, and shall take final action on the application within ninety (90) days after the public hearing, unless there is written mutual agreement by the applicant and Board to an extension of these time periods (see 5.7.5.B below). Public notice of the hearing shall be provided to parties in interest (see Article 2 for definitions), in accordance with the procedures set forth in M.G.L. Chapter 40A, Section 11, as amended.

B. The applicant may grant permission for the Planning Board to extend the required time frame before which the Planning Board must provide notice and open a public hearing.

C. The period within which final action shall be taken by the Planning Board may be extended for a definite period by mutual consent of the Planning Board and the applicant.

D. In the event the Planning Board determines that the plans and information of the submitted NEIGHBORHOOD DEVELOPMENT PLAN or presented to it at the public hearing are inadequate to permit the Board to make the required findings, at its discretion, instead of denying the application, it may:
   1. Continue the hearing to a later date to permit the applicant to submit a revised plan and/or further information, provided, however, that such adjournment shall not extend the ninety (90) day period within which final action must be taken by the Board, unless said period is extended to a day certain by mutual consent. In such cases, the applicant shall bear the cost of re-advertising the continuance and re-notification of the property owners; or
   2. Grant a leave to withdraw without prejudice so that the applicant may submit a revised application which shall not be considered as a repetitive petition. Such revised application shall be treated as a new submission.

5.7.6 Findings and Compliance

A. The Planning Board shall approve a NEIGHBORHOOD DEVELOPMENT PLAN upon making positive findings as indicated for the specific district where the NEIGHBORHOOD DEVELOPMENT PLAN review process is authorized.

B. The Planning Board may reject a NEIGHBORHOOD DEVELOPMENT PLAN only when:
   1. the submittal fails to furnish adequate information required for review;
   2. the imposition of reasonable conditions would not ensure compliance to standards, as applicable; and/or
   3. the submittal, although proper in form, includes or creates an intractable problem so intrusive on the needs of the public in one regulated aspect or another and cannot be adequately mitigated.

C. The Planning Board may require the posting of a bond or other performance guarantee to assure compliance with the NEIGHBORHOOD DEVELOPMENT PLAN and/or conditions, as approved.

5.7.7 Conditions

A. The Planning Board may attach conditions and/or limitations to the approval of any NEIGHBORHOOD DEVELOPMENT PLAN it deems necessary in order to ensure compliance to the findings and/or standards as required for the specific district where the NEIGHBORHOOD DEVELOPMENT PLAN review process is authorized.

5.7.8 Revisions

A. Proposed revisions to an approved NEIGHBORHOOD DEVELOPMENT PLAN shall be submitted to the Planning Director.

B. The Planning Director shall determine if the proposed revision is equivalent to a minor or major amendment to the previously approved NEIGHBORHOOD DEVELOPMENT PLAN within fourteen (14) days of receipt of a revised NEIGHBORHOOD DEVELOPMENT PLAN application.
   1. Upon a determination that the proposed revision is a minor amendment, the Planning Director shall approve or deny the proposed revisions in writing. Upon denial, the applicant may appeal the decision of the Planning Director to the Planning Board.
   2. Upon a determination that the proposed revision is a major amendment, the Planning Director shall notify, in writing, the applicant and the Planning Board of the determination and the applicant shall submit the proposed revisions to the Planning Board as a new NEIGHBORHOOD DEVELOPMENT PLAN submission according to the requirements of §5.7.4.

C. When considering a major amendment to a NEIGHBORHOOD DEVELOPMENT PLAN application, review by the Planning Board shall be limited to the proposed revisions to the previously approved plan.

APPENDIX D

Insert into Article 6 as Section 6.6

6.6 NORTH POINT SPECIAL DISTRICT

6.6.1 Intent

A. The North Point Special District (NPSD) governs the land areas of Somerville in close proximity to the MBTA's Lechmere and Community College transit stations as shown on the official Zoning Map of the City of Somerville.

B. Where the provisions of this Section conflict with those found elsewhere in this Ordinance, the provisions of this Section shall apply.

6.6.2 Purpose

A. The purpose of the NPSD is to establish regulations supporting the development of a comprehensively planned neighborhood of mixed-use, moderate- to high-density development within easy walking distance to transit and having the following characteristics:

1. An interconnected street grid and comprehensive THOROUGHFARE network that distributes multi-modal circulation throughout the entire North Point neighborhood;
2. THOROUGHFARES that accommodate all modes of transportation - pedestrians, bicycles, public transit, and private motor vehicles.
3. THOROUGHFARES that feature frequent intersections, on-street parking, and large street trees to promote safe vehicular operating speeds by modulating the appearance and feel of the street space to drivers;
4. Appealing physical connections to surrounding areas including East Cambridge, the Community College Orange Line T-Station via the Gilmore Bridge, MDC New Charles River Basin Park, and regional pathways;
5. Pedestrian infrastructure that is accessible to and usable by persons with disabilities;
6. A North First Street extension as the primary connection to East Cambridge;
7. A distribution of diverse CIVIC SPACE types to serve the various social needs of neighborhood residents, workers, and visitors, including a central green;
8. A retail oriented PLAZA in close proximity to the relocated Lechmere T-Station;
9. Primary uses distributed throughout the neighborhood so that the many activities of daily living can occur within walking distance to residences and workplaces;
10. A constrained supply of parking spaces to encourage the use of public transit, bicycles, and walking in lieu of automobiles.
11. A diverse supply of residential unit types, sizes, and price points that meets the life-long housing needs of the community.
12. Architecture and landscape design that spatially defines CIVIC SPACES and THOROUGHFARES as outdoor rooms and corridors.

6.6.3 Permitting Process

A. Neighborhood Development Plans

1. Submittal and Review
   a. No property owner shall make a SUBDIVISION of a DEVELOPMENT SITE, or proceed with the improvement of LOTS, the construction of THOROUGHFARES, or the installation of municipal utility services within a DEVELOPMENT SITE until a NEIGHBORHOOD DEVELOPMENT PLAN has been approved by the Planning Board.
   b. The submittal and review of NEIGHBORHOOD DEVELOPMENT PLANS shall be administered according to the procedural requirements of §5.7 Neighborhood Development Plans of the Somerville Zoning Ordinance.
   c. SPECIAL PERMIT applications for building types may be submitted simultaneously as part of a NEIGHBORHOOD DEVELOPMENT PLAN application (see §6.6.3.C Special Permits).
2. Scope
   a. NEIGHBORHOOD DEVELOPMENT PLANS submitted for DEVELOPMENT SITES in more than one municipality shall include the total land area of the DEVELOPMENT SITE, regardless of municipal boundaries, for all phases of development to illustrate neighborhood context in total.
   b. NEIGHBORHOOD DEVELOPMENT PLANS shall identify the estimated build-out program for each proposed LOT within the DEVELOPMENT SITE, calculated for by-right building types and/or building types that may be approved by SPECIAL PERMIT, as applicable.
3. Findings and Compliance
   a. The Planning Board shall approve a NEIGHBORHOOD DEVELOPMENT PLAN upon finding that the submitted plan demonstrates:

i. conformance to the adopted Master Plan of the City of Somerville, existing policy plans and standards established by the City, or to other plans deemed to be appropriate by the Planning Board;
ii. consistency with the purpose of the NPSD and of this Ordinance in general; and
iii. compliance with standards set forth in §6.6.4 Neighborhood Standards and §6.6.5 Thoroughfare Design Standards.

B. Design and Site Plans
1. Submittal and Review
a. No building permits shall be issued for the development or redevelopment of LOTS and/or buildings and the construction or reconstruction of THOROUGHFARES and/or CIVIC SPACES shall not be permitted to commence until a DESIGN AND SITE PLAN has been approved by the Planning Board.
b. The construction of THOROUGHFARES that differ from the alignment, connectivity, and/or lane geometry of an approved NEIGHBORHOOD DEVELOPMENT PLAN shall not proceed until a DESIGN AND SITE PLAN has been approved by the Planning Board.
c. The submittal and review of DESIGN AND SITE PLANS shall be administered according to the procedural requirements of §5.4 Design and Site Plan Review of the Somerville Zoning Ordinance.
d. SPECIAL PERMIT applications for building types may be submitted simultaneously as part of a DESIGN AND SITE PLAN application (see §6.6.3.C Special Permits).
2. Scope
a. DESIGN AND SITE PLANS submitted for LOTS in more than one municipality shall include the total land area of the LOT, regardless of municipal boundaries.
3. Findings and Compliance
a. Thoroughfares
i. The Planning Board shall approve DESIGN AND SITE PLANS for THOROUGHFARES upon finding that the submitted plan demonstrates:
(a) conformance to the adopted Master Plan of the City of Somerville, existing policy plans and standards established by the City, or to other plans deemed to be appropriate by the Planning Board;
(b) consistency with the purpose of the NPSD and of this Ordinance in general;
(c) adaptability of the proposed THOROUGHFARE segment to the alignment, connectivity, and lane geometry of THOROUGHFARES approved as part of a NEIGHBORHOOD DEVELOPMENT PLAN for the DEVELOPMENT SITE;
(d) compliance with the provisions set forth in §6.6.5 Thoroughfares, as applicable.
b. Civic Spaces
i. The Planning Board shall approve DESIGN AND SITE PLANS for CIVIC SPACES upon finding that the submitted plan demonstrates:
(a) conformance to the adopted Master Plan of the City of Somerville, existing policy plans and standards established by the City, or to other plans deemed to be appropriate by the Planning Board;
(b) consistency with purpose of the NPSD and of this Ordinance in general; and
(c) compliance with the provisions set forth in §6.6.6 Civic and Recreation Spaces, as applicable for each type.
ii. The Planning Board may solicit comments and/or recommendations from the Design Review Committee (DRC) in consideration of how the following design elements contribute toward maximization of the actual utility of a CIVIC SPACE for its intended use:
(a) solar orientation;
(b) pedestrian desire lines;
(c) landscape design;
(d) integration with nearby buildings; and
(e) the relationship of the CIVIC SPACE to others nearby.
c. Lots
i. The Planning Board shall approve DESIGN AND SITE PLANS for individual LOTS and/or buildings upon finding that the submitted plan demonstrates:
(a) conformance to the adopted Master Plan of the City of Somerville, existing policy plans and standards established by the City, or to other plans deemed to be appropriate by the Planning Board;

(b) consistency with purpose of the NPSD and of this Ordinance in general; and
(c) compliance with the provisions set forth in §6.6.7 Lots, §6.6.8 Permitted Uses, §6.6.9 Building Types, §6.6.10 Parking and Loading, and §6.6.11 Environmental Performance, as applicable.

ii. The Planning Board may solicit comments and/or recommendations from the Design Review Committee (DRC) in consideration of, but not limited to, the following:
(a) site planning, buildings placement, building bulk, floor plans, exterior design, construction materials, green building techniques, landscaping, entrance and exit placeemnt, signage; and,
(b) the local microclimate including pedestrian level winds, weather protection, air quality, the reflection of sunlight, and the casting of shadows.

C. Special Permits
1. Submittal and Review
a. SPECIAL PERMIT applications may be submitted simultaneously as part of a NEIGHBORHOOD DEVELOPMENT PLAN submittal for an entire DEVELOPMENT SITE or as part of a DESIGN AND SITE PLAN submittal for individual LOTS.
b. The submittal and review of SPECIAL PERMITS shall be administered according to the procedural requirements of §5.1 Special Permits of the Somerville Zoning Ordinance.
c. The Planning Board shall serve as the SPECIAL PERMIT GRANTING AUTHORITY in the NPSD.
2. Findings and Compliance
a. The Planning Board may grant a SPECIAL PERMIT upon finding that a submitted SPECIAL PERMIT application demonstrates:
i. compliance with the submittal requirements of §5.1 Special Permits;
ii. conformance to the adopted Master Plan of the City of Somerville, existing policy plans and standards established by the City, or to other plans deemed to be appropriate by the Planning Board;
iii. consistency with purpose of the NPSD and of this Ordinance in general;
iv. compliance with the provisions set forth in §6.6.7 Lots, §6.6.8 Permitted Uses, §6.6.9 Building Types, §6.6.10 Parking and Loading, and §6.6.11 Environmental Performance, as applicable.

D. Waivers
1. Submittal
a. WAIVER requests shall be submitted in writing as part of any NEIGHBORHOOD DEVELOPMENT PLAN or DESIGN AND SITE PLAN application and accompanied by written and graphic information as required.
b. WAIVERS may only be requested for eligible standards as specifically indicated in this Section.
c. The Planning Board retains the right to deny any WAIVER request that is inconsistent with the purpose of the NPSD.
2. Findings and Compliance
a. The Planning Board may grant a WAIVER upon making positive findings in determining the request is:
i. within the public interest;
ii. consistent with any WAIVER eligibility requirements, as indicated in this Section; and
iii. consistent with the orderly SUBDIVISION of a DEVELOPMENT SITE and the construction of THOROUGHFARES and/or installation of municipal utility services within a DEVELOPMENT SITE according to standards deemed to be appropriate by the Planning Board.

E. Minor Projects
1. Per §3.5.4.D of this Ordinance, LOT SPLITS, LOT MERGERS, and LOT LINE ADJUSTMENTS shall be considered minor projects and shall be reviewed subject to the Rules and Regulations of the Planning Board.

FIGURE 6.1 Process Chart

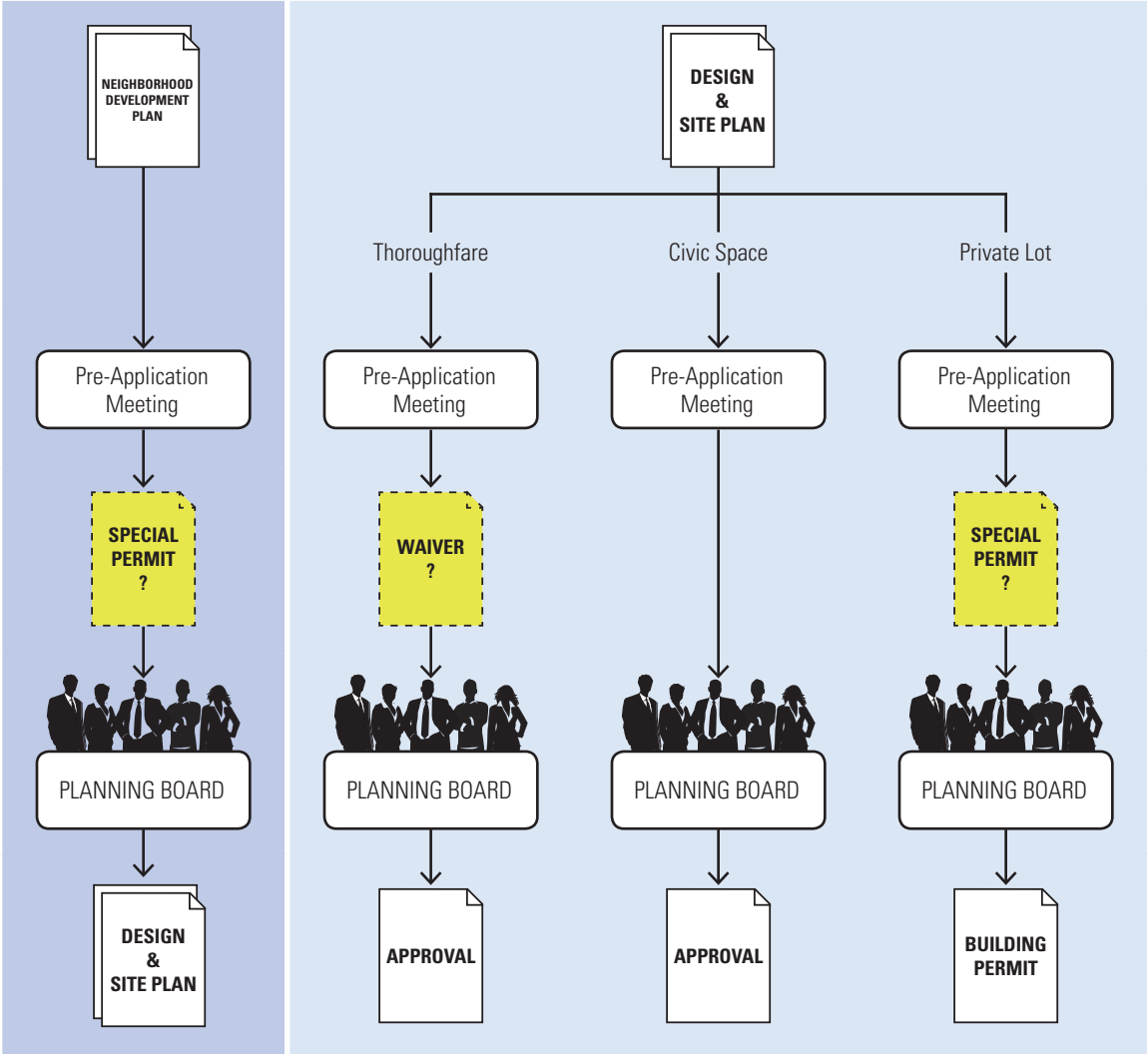

6.6.4 Neighborhood Structure

A. Thoroughfare Network
   1. All THOROUGHFARES shall intersect with other THOROUGHFARES, forming a network.
   2. Proposed THOROUGHFARES should align wherever possible to those on adjacent sites.
   3. Cul-de-sacs and other dead-end THOROUGHFARES are prohibited unless granted a WAIVER from the intersection requirement of §6.6.4.A.1 on a case-by-case basis by the Planning Board to accommodate specific site conditions.

B. Block Structure
   1. The THOROUGHFARE network shall be structured to define individual BLOCKS with a total perimeter no greater than 1,400 feet and individual BLOCK FACES no greater than 500 feet.
   2. BLOCKS abutting undeveloped land, areas unsuitable for development, pre-existing incomplete BLOCKS, or rail rights-of-way may be granted a WAIVER from the BLOCK FACE length and BLOCK perimeter restriction of §6.6.4.B.1 at the discretion of the Planning Board.

C. Lots
   1. LOTS shall be platted to have a primary frontage abutting a THOROUGHFARE and a LOT width between 30 feet minimum and 500 feet maximum.

D. Civic Space
   1. At least 5% of the total land area of a DEVELOPMENT SITE shall be designed as publicly accessible CIVIC SPACE and shall be distributed throughout the site as a series of separate spaces of various types and sizes (see §6.6.6 Civic and Recreation Spaces).
   2. CIVIC SPACE designed as a PUBLIC COMMON (see §6.6.6.C) shall be exempt from the BLOCK perimeter restrictions of §6.6.4.B.1.
   3. CIVIC SPACES should be oriented to maximize exposure to the sun. In no case shall any portion of a CIVIC SPACE with only a NORTH-FACING orientation qualify for the land area requirement of §6.6.4.D.1.

6.6.5 Thoroughfares

A. THOROUGHFARES shall include vehicular lanes and sidewalks.

B. THOROUGHFARES shall be designed and constructed in accordance with the City of Somerville's adopted THOROUGHFARE design standards. In the absence of adopted standards, THOROUGHFARES shall be designed and constructed in accordance to standards deemed to be appropriate by the Planning Board.

C. Vehicular lanes and sidewalks shall be designed in accordance with the following:
   1. Motor Vehicle Travel Lanes
      a. Motor vehicle travel lanes may have a width between ten (10) feet minimum and twelve (12) feet maximum.
      b. No more than two (2) motor vehicle travel lanes may be combined for any single direction of traffic flow.
   2. Motor Vehicle Parking Lanes
      a. Motor vehicle parking lanes shall be eight (8) feet wide or narrower for parallel parking and eighteen (18) feet wide or narrower for diagonal parking.
      b. Gutter seams, drainage inlets, and utility covers shall be flush with the pavement surface and oriented to prevent conflicts with bicycle tires.
      c. Gutter pans shall be incorporated into the width of any parking lane.
   3. Bike Lanes
      a. Bike lanes may have a width between five (5) feet minimum and six (6) feet maximum.
      b. A six (6) to eight (8) inch solid white lane line shall be used to visually separate motor vehicle travel lanes from any bike lane.
      c. A four (4) inch solid white lane line shall be used to visually separate any bike lane from an adjacent motor vehicle parking lane, as applicable.
      d. Word, symbol, and arrow pavement markings (MUTCD Figure 9C-3) shall be used to define any bike lane as the portion of a THOROUGHFARE dedicated for specific use by bicyclists.
      e. Through bike lanes shall be located to the left of any dedicated motor vehicle right-turn only lane.
      f. Lane striping shall be dashed through areas of merging and crossing vehicles.
      g. Color shall be used to enhance the visibility of bikes lanes in locations determined to be necessary by the Traffic and Parking Department.
   4. Sidewalks
      a. All new and reconstructed sidewalks shall be accessible to and usable by persons with disabilities in

accordance with the Americans with Disabilities Act and the Rules and Regulations of the Massachusetts Access Board (521 CMR), as amended.

b. Sidewalks shall include a walkway and furnishing zone, and may include an edge and/or frontage zone as illustrated in Figure 6.2: Sidewalks.
   i. Walkways shall be a minimum of six (6) feet in width.
   ii. Furnishing zones shall be a minimum of four (4) feet in width.
   iii. Edge zones (ie. "curbwalks") shall be a minimum of two (2) feet in width.
   iv. Frontage zones shall be a maximum of four and a half (4.5) feet in width.

Figure 6.2 Sidewalks

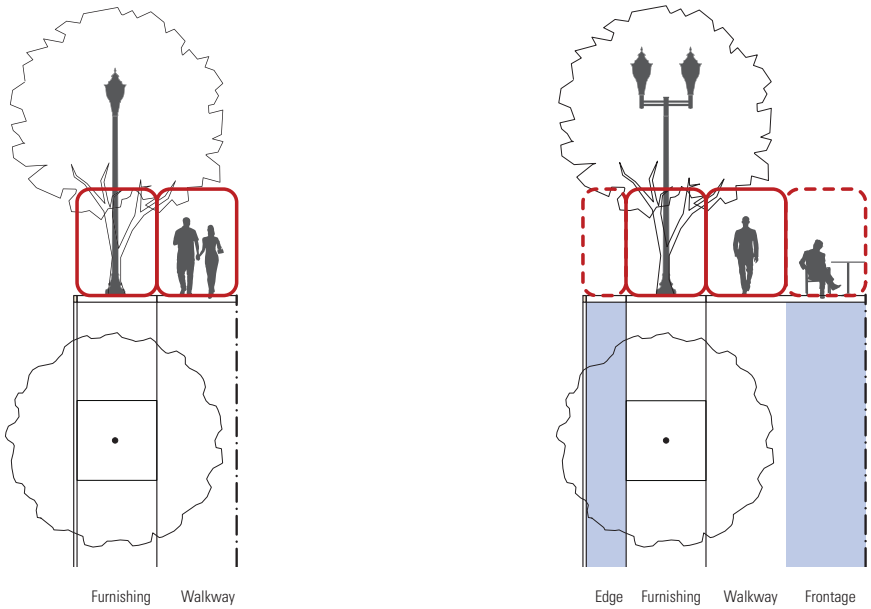

c. Sidewalks shall include street trees planted within the furnishing zone in a regularly-spaced ALLEE pattern no greater than thirty (30) feet on center. Along retail frontages, street trees may be planted in an irregularly-spaced ALLEE pattern to avoid visually obscuring storefront windows and signage.
d. When planted, street trees shall be a minimum height of ten (10) feet and/or two (2) inches in caliper.
e. A minimum sixteen (16) sq. ft. open soil area shall be left around each street tree, centered at the tree trunk. When level with an adjacent walkway, the soil area shall be protected by six (6) inch metal fencing and mulch shall be applied to a minimum depth of three (3) inches. When recessed below an adjacent walkway, open soil areas shall be protected by metal tree grates.
f. Sidewalks in front of TERMINATED VISTAS and along CIVIC SPACE frontage may be granted a WAIVER from street tree requirements at the discretion of the Planning Board.
g. Public furniture installed in the furnishing zone shall be subject to the standards of §6.6.6.H.1: Amenities and Public Furniture.
h. The pavement design of walkways shall be continuous for the full length of each BLOCK FACE.

5. Sidewalk Extensions (see Figure 6.3: Sidewalk Extensions)
   a. Sidewalk extensions shall occupy the full width of the parking lane they extend into.
   b. When a bike lane is present, sidewalk extensions shall be set back so that the gutter does not extend into the bike lane.
   c. At corners, sidewalk extensions shall run at least five (5) feet from the corner area of the sidewalk as illustrated in Figure 6.3: Sidewalk Extensions.
   d. At bus stops, sidewalk extensions shall run at least fifty (50) feet from the corner area of the sidewalk.

Figure 6.3 Sidewalk Extensions

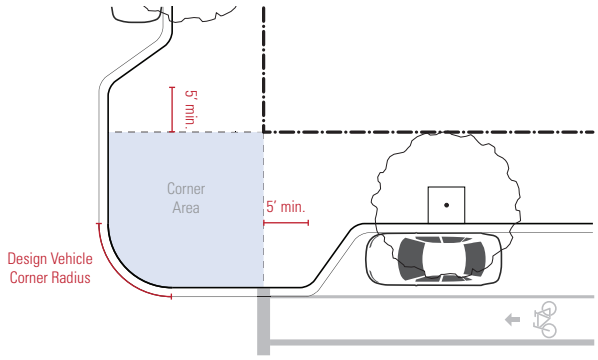

6. Pedestrian Crosswalks
   a. Crosswalks shall be designed as shown in Table 6.6.5: Pedestrian Crosswalks.
   b. Crosswalk markings shall be aligned with the walkway of all adjacent sidewalks unless granted a WAIVER by the Planning Board.
   c. Where the walkway is wider than the prescribed width of the crosswalk, crosswalk markings should be widened to match the walkway of the sidewalk.

Table 6.6.5 Pedestrian Crosswalks

Total Width	10 feet
Stripe Thickness	1 foot
Stripe Length	10 feet
Stripe Offset	3 feet o.c.

7. Driveway and Alley Crossings
   a. Driveway crossings traversing sidewalks with paved furnishing zones shall be designed to maintain the grade and clear width of the walkway they cross and shall include sloped flares on either side of the driveway apron as shown in Figure 6.3: Driveway and Alley Crossings.
   b. Driveway crossings traversing sidewalks with continuously planted furnishing zones shall be designed to maintain the grade and clear width of the walkway they cross and shall include returned curbs as shown in Figure 6.5: Driveway and Alley Crossings.
   c. The appearance of any walkway (ie. scoring pattern or special paving) shall be maintained across any driveway or alley to indicate that, although a vehicle may cross, the area traversed by a vehicle remains part of the sidewalk.

Figure 6.5 Driveway and Alley Crossings

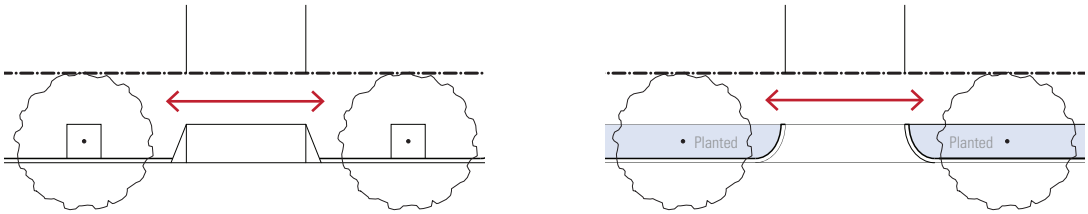

Crossing with Flares

Crossing with Returned Curbs

D. THOROUGHFARES designed as a CLOSE may be granted a WAIVER from the requirements of 6.6.5.C at the distretion of the Planning Board.
E. All water and sewer utilities, storm water management infrastructure, public lighting, and public furniture shall be designed and constructed according to criteria established by the relevant City department and adopted by the Planning Board.

6.6.6 Civic and Recreation Spaces

A. General

1. Civic spaces should be oriented to maximize exposure to the sun. In no case shall any portion of a civic space with only a north-facing orientation qualify for the land area requirement of §6.6.4.D.1.

B. Amenities and Public Furniture

1. Required Seating
   a. Linear feet of seating may be provided through movable chairs, fixed individual seats, fixed benches with or without backs, seat walls, planter and fountain ledges, and/or seating steps.
   b. Seat walls, planter and fountain ledges, and/or seating steps shall not, in aggregate, represent more than 15 percent of the linear feet of required seating.
   c. All seating shall have a minimum seat depth of 18 inches and a seat height between 16 and 30 inches above grade (adjacent walking surfaces).
   d. Seating 30 inches or more in depth shall count as double the linear feet, provided there is access to both sides.
   e. Planter or fountain ledges provided as seating shall have a minimum depth of 22 inches.
   f. Seat backs shall be a minimum of 14 inches high and either contoured in form for comfort or reclined between 10 to 15 degrees from vertical. Walls located adjacent to a seating surface shall not count as seat backs.
   g. Movable chairs shall not be chained, fixed, or otherwise secured while a civic space is open to the public, however may be removed during the hours of 9:00pm to 7:00am.
   h. Steps provided for pedestrian circulation and the seating of open air café areas shall not count toward seating requirements.
   i. Steps provided for pedestrian circulation shall have a height (rise) between 4 to 6 inches and minimum tread (run) of 17 inches, except that steps with a height (rise) of 5 inches may have a minimum tread (run) of 15 inches.
   j. Deterrents to seating, such as spikes, rails, or deliberately uncomfortable materials or shapes, placed on surfaces that would otherwise be suitable for seating are prohibited.
   k. Deterrents to skateboards, rollerblades and other wheeled devices are permitted on seating surfaces if they do not inhibit seating, maintain a minimum distance of five feet between deterrents, and are integrated into the seating surface at the time of manufacture or construction.
2. Litter Receptacles
   a. Litter receptacles shall be 30 to 50 gallon containers with an opening no more than 36 inches above grade and designed in such a manner that users do not have to touch the receptacle or push open a door in order to dispose of litter. Litter receptacles shall be constructed of durable materials that are graffiti-, fire-, rust-, and stain-resistant and function to permit emptying from the top. Litter receptacles should be located near entrances to civic spaces and within reasonable proximity to seating areas.
3. All public lighting and irrigation infrastructure, as required, shall be designed and installed according to all criteria established by City departments deemed to be appropriate by the Planning Board.

C. Civic Buildings

1. Accessory structures common to civic spaces, including but not limited to, restrooms, open-air pavilions, gazebos, picnic shelters, outdoor theaters/performance stages, and their substantially equivalents shall be permitted.

D. Public Common

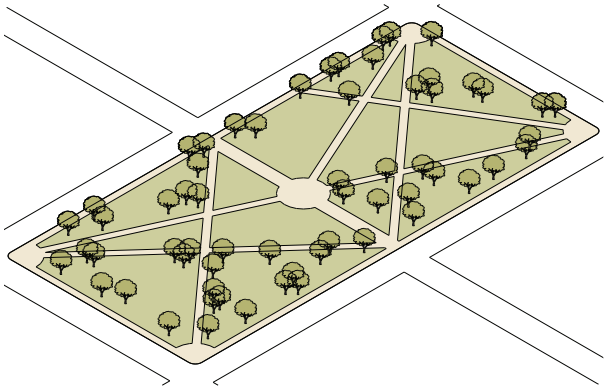

A civic space type for unstructured recreation, free standing in the block pattern, with landscape consisting of lawn, paths, and trees.

PROCESS	
a. Plan Submittal	Design and Site Plan
FORM	
a. Size	20,000 sq. ft. - 8 acres max.
AMENITIES	
a. Seating	1 linear foot / 400 sq ft.
b. Tables	N/A

1. Design Guidelines
   a. A PUBLIC COMMON should provide a substantially sized and uninterrupted open space that is landscaped with smooth ground covers, large canopy trees, and little to no understory plants. Both paved and unpaved paths may be provided, as well as a substantial water feature.
   b. Large canopy trees should be used in an informal manner to spatially define the perimeter while also framing views of neighboring buildings from within the PUBLIC COMMON.
   c. A PUBLIC COMMON should be designed to promote options for children to engage in different forms of play; provide locations where sports, picnics, special events, and simple relaxation can occur for adults; and may include areas designed specifically to accommodate the activities of a public market.
   d. Paths should provide a variety of walking/running circuits within the PUBLIC COMMON, accommodate desire lines to surrounding uses on neighboring BLOCKS, and provide different sensory experiences along their edge that change over time and vary across the PUBLIC COMMON.
   e. A PUBLIC COMMON should offer a variety of seating types and seating locations, including places to sit in the sun, in the shade, out of the wind, in groups, alone, close to activity, and in relative seclusion to every extent possible.
   f. Benches and seating ledges or walls should be designed for the convenience and comfort of visitors, located in support of gathering spaces and along pedestrian paths, but should be out of the flow of pedestrian traffic.
   g. A PUBLIC COMMON should incorporate lighting that promotes safety while adding visual ambiance and character to the space at night. Lighting fixtures should be smaller-scale, frequently placed, and scaled to pedestrians. Fixture components (base, pole, luminaries) should have stylistic compatibility, while varying in form according to functional requirements. The indiscriminate use of bright lighting should be limited.
   h. Entrances should be well designed to make visitors feel welcome and comfortable entering the space, be physically and visually accessible from surrounding BLOCKS, and include areas for congregating in groups.

E. Public Square

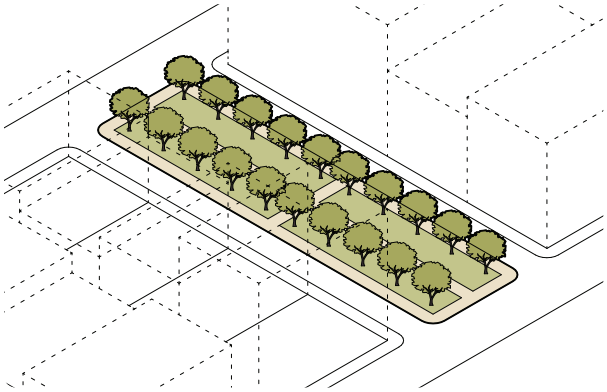

A civic space type for unstructured recreation and civic purposes, free standing in the block pattern, with landscape consisting of formally disposed lawns, paths, and trees.

PROCESS	
a. Plan Submittal	Design and Site Plan
FORM	
a. Size	8,000 sq. ft. - 2 acres max.
AMENITIES	
a. Seating	1 linear foot / 275 sq ft.
b. Tables	N/A

1. Design Guidelines
   a. A PUBLIC SQUARE should have design characteristics in response to the surrounding civic, commercial, and/or residential context of surrounding buildings.
   b. A PUBLIC SQUARE should offer a variety of seating types and seating locations.
   c. Benches and seating ledges or walls should be designed for the convenience and comfort of visitors, located in support of gathering spaces and along pedestrian paths, but should be out of the flow of pedestrian traffic.
   d. A PUBLIC SQUARE should incorporate lighting that promotes safety while adding visual ambiance and character to the space at night. Lighting fixtures should be smaller-scale, frequently placed, and scaled to pedestrians. Fixture components (base, pole, luminaries) should have stylistic compatibility, while varying in form according to functional requirements. The indiscriminate use of bright lighting should be limited
   e. Entrances should be well designed to make visitors feel welcome and comfortable entering the space and should be physically and visually accessible from surrounding BLOCKS.

F. Plaza

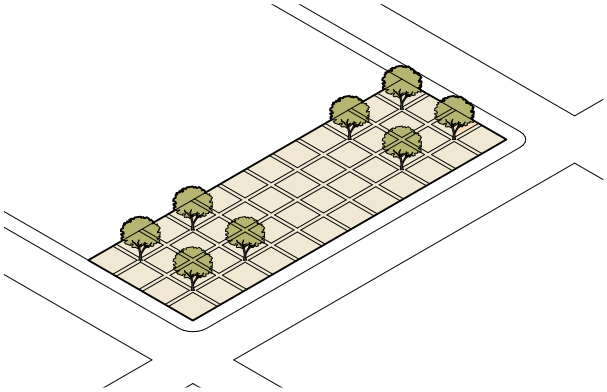

A civic space type designed for civic purposes and commerical activities, integrated as part of a block/ lot or located internal to a block/lot, with landscape consisting primarily of pavement.

PROCESS	
a. Plan Submittal	Design and Site Plan
FORM	
a. Size	8,000 sq. ft. - 1.5 acres max.
AMENITIES	
a. Seating	1 linear foot / 30 sq ft.
b. Tables	1 per every 4 movable chairs

1. Design Guidelines
   a. A PLAZA should contain substantial areas of hardscape complemented by planting beds or formal arrangements of trees with open canopies. Paved surfaces should include a variety of patterns and colors.
   b. A PLAZA should offer an abundance and variety of seating types and seating locations, including places to sit in the sun, in the shade, out of the wind, in groups, alone, close to activity, and in relative seclusion to every extent possible.
   c. Benches and seating ledges or walls should be designed for the convenience and comfort of visitors, located in support of gathering spaces and along pedestrian paths, but should be out of the flow of pedestrian traffic.
   d. A PLAZA should incorporate lighting that promotes safety while adding visual ambiance and character to the space at night. Lighting fixtures should be smaller-scale, frequently placed, and scaled to pedestrians. Fixture components (base, pole, luminaries) should have stylistic compatibility, while varying in form according to functional requirements. The indiscriminate use of bright lighting should be limited.
   e. Directional, educational, informational, and geographic signage should be placed in conjunction with other CIVIC SPACE amenities or places where paths cross.
   f. The perimeter of a PLAZA should be well integrated into its surroundings and free from fences, hedges, and other barriers that would impede movement into the space and obscure visibility from adjacent street or building frontage.
2. Development Standards
   a. The depth of any PLAZA shall not be less than one third of the width.
   b. Each PLAZA shall provide at least two types of seating.
   c. Movable chairs may be counted as 2 feet of linear seating per chair.
   d. A minimum of one (1) linear foot of required seating for every two linear feet of PLAZA street frontage shall be located within 15 feet of the adjacent sidewalk.
   e. A minimum of 50% of any fixed seating shall have seat backs 14 inches high and either contoured in form for comfort or reclined between 10-15 degrees from vertical. Walls located adjacent to a seating surface shall not count as seat backs.
   f. PLAZAS shall provide direct access free from obstructions from any adjoining sidewalk for at least 50 percent of the total length of the street frontage.
   g. The surface of a PLAZA shall not be lower than the average elevation of the adjoining sidewalk nor more than two feet above the average elevation of any adjoining sidewalk at any point. PLAZAS that front onto an adjoining sidewalk with a slope greater than 2.5 percent along the frontage of the PLAZA shall not be any lower than one foot below the average elevation of the adjoining street at any point.
   h. One litter receptacle shall be provided for every 1,500 square feet of PLAZA area up to 6,000 square feet. PLAZAS greater than 6,000 square feet in area must provide an additional litter receptacle for every additional 2,000 square feet of PLAZA area over 6,000 square feet. PLAZAS that contain open air cafes or kiosks providing food service shall provide one additional litter receptacle for each 1,500 square feet of PLAZA area occupied by such outdoor eating area.

G. Pocket Park

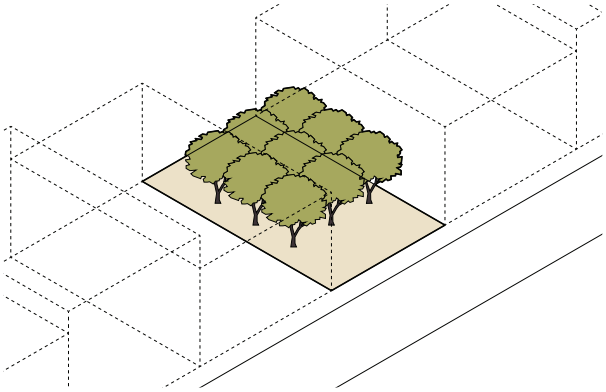

A civic space type designed for unstructured recreation, integrated as part of a block/lot or located intenal to a block/lot, consisting of greenery and a place to sit outdoors for adults, and spatially defined by surrounding buildings.

PROCESS	
a. Plan Submittal	Design and Site Plan
FORM	
a. Size	800 sq. ft. - 10,000 sq. ft. max.
AMENITIES	
a. Seating	1 linear foot / 50 sq ft.
b. Tables	1 per every 3 movable chairs

1. Design Guidelines
   a. A POCKET PARK should contain substantial areas of hardscape complemented by planting beds or formal arrangements of trees with open, spreading canopies.
   b. A POCKET PARK should offer an abundance and variety of seating types and seating locations.
   c. Benches and seating ledges or walls should be designed for the convenience and comfort of visitors, located in support of gathering spaces and along the perimeter of the space, but should be out of the flow of pedestrian traffic.
   d. A POCKET PARK should incorporate lighting that promotes safety while adding visual ambiance and character to the space at night. Lighting fixtures should be smaller-scale, frequently placed, and scaled to pedestrians. Fixture components (base, pole, luminaries) should have stylistic compatibility, while varying in form according to functional requirements. The indiscriminate use of bright lighting shall be prohibited.
   e. Entrances should be well designed to make visitors feel welcome and comfortable entering the space.

H. Dog Park

A civic space type designed for the recreation of dogs and their owners.

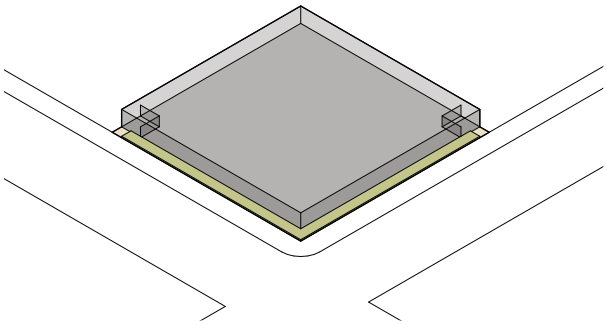

PROCESS	
a. Plan Submittal	Design and Site Plan
FORM	
a. Size	10,000 sq. ft. min.
AMENITIES	
a. Seating	1 linear foot / 275 sq. ft.
b. Tables	N/A

1. Design Guidelines
   a. A DOG PARK may be free standing in the block pattern, located internal to a block/lot, or may be incorporated as a subordinate feature of a PUBLIC COMMON or PUBLIC SQUARE.
2. Development Standards
   a. DOG PARKS shall be fenced on all sides to a minimum height of 60 inches. Fence footings shall be buried to a depth of one (1) foot and fence panels shall be buried to a depth of six (6) inches at all locations except at entrances/exits.
   b. DOG PARKS shall have two entrances/exits.
   c. Entrances/exits shall have a safety gate, with an outer and inner gate on either side of a minimum sixteen (16) square-foot "vestibule" area. This "vestibule" area serves as a buffer between the entrance and the rest of the park.
   d. One (1) litter receptacle and one (1) dog valet shall be provided near each entrance/exit.
   e. A sub-base of crushed gravel or equivalent that will compact to a dense, graded permeable subsurface shall be provided.
   f. Ground cover shall be decomposed (crushed) granite or similar material that is non water-absorbing and devoid of organic material.
   g. Planting beds shall be included along the outside of the perimeter fence to help screen the DOG PARK and reduce potential runoff.
   h. DOG PARKS shall include a watering area with a standard hose-bib.
   i. Each DOG PARK shall have a permanent sign, stating the hours of operation, rules, and regulations for the DOG PARK.

6.6.7 Lots

A. LOTS shall have a primary frontage abutting a THOROUGHFARE and a LOT width between fifty (50) feet minimum and five-hundred (500) feet maximum.
B. One (1) building may be built on each LOT.

6.6.8 Permitted Uses

A. The following building use categories and principal uses are established according to Table 6.2 Use Categories and Principal Uses.

Table 6.6.8 Use Categories and Principal Uses

CATEGORY	PRINCIPAL USES
1. Retail and Consumer Service	a. Retail Sales b. Grovery Stores/Supermarkets c. Personal and/or Family Services d. Restaurant and/or Bar e. Theater f. Commercial Recreation
2. Commercial Office	a. Medical Practitioner b. Business and/or Professional Services c. Real Estate d. General Office and/or Studio Space e. Bank f. Mass Media Studio
3. Lodging	a. Hotel
4. R&D and/or Laboratory	a. Research & Development b. Product Assembly
5. Institutional, Religious, and/or Educational Services	a. All uses qualifying under M.G.L. 40A, Section 3
6. Residential	a. Multi-Unit Residential
7. Accessory	a. Parking Garage b. Home Occupation c. Cellular, Radio, and Internet Transmission

B. The establishment of any principal use and changes in use within the same category shall be permitted by right.
C. Changes in use to a different category may be permitted by SPECIAL PERMIT, except changes in use to Institutional, Religious, and/or Educational Services meeting the criteria of M.G.L. 40A, Section 3 shall be permitted by-right.
D. Principal uses not expressly authorized are prohibited.
E. Drive-up and drive-through uses shall be prohibited.
F. Use Performance Standards
    1. Retail and Consumer Service Use Category
        a. Retail Sales
            i. The manufacturing, assembly, and/or packaging of merchandise shall be prohibited.
            ii. Total gross floor area shall be limited to 10,000 square feet per ground floor establishment.
        b. Grocery Stores/Supermarkets
            i. Total gross floor area shall be limted to 50,000 square feet per establishment and may be larger by SPECIAL PERMIT.
            ii. Pharmacies shall be prohibited as an accessory use within Grocery Stores/Supermarkets.
        c. Personal and/or Family Services
            i. Flammable solvents shall be prohibited for businesses providing laundry and dry cleaning services.
            ii. Total gross floor area shall be limited to 10,000 square feet per ground floor establishment.
        d. Bar and/or Restaurant
        e. Theatre
        f. Commercial Recreation
            i. Total gross floor area shall be limited to 10,000 square feet per ground floor establishment and 50,000 square feet for upper floor establishments. Upper floor establishments may be larger than 50,000 square feet by SPECIAL PERMIT.

2. Commercial Office Use Category
    a. Medical Practitioner
    b. Professional Services
        i. Total gross floor area shall be limited to 5,000 square feet per establishment.
    c. Real Estate
    d. General Office
    e. Bank
    f. Mass Media Studio
3. Lodging Category
4. R&D and/or Laboratory Use Category
    a. Research and Development
        i. Wholesale storage of flammable liquids, gas, or explosives shall be prohibited.
    b. Product Assembly
        i. Floorspace dedicated to product assembly, packaging, and/or storage shall be limited to 25% gross floor area.
        ii. All dust, fumes, gases, odors, smoke or vapors, noise, or vibrations shall be effectively confined to the LOT.
5. Institutional, Religious, and/or Educational Services Use Category
6. Residential Use Category
    a. Multi-Unit Residential
7. Accessory Use Category
    a. Parking Garage
    b. Home Occupation
        i. Business activities shall be restricted to the resident(s) of the dwelling unit using equipment customarily found within a household.
        ii. The production of offensive noise, vibration, smoke, dust, or other particulate matter, heat humidity, glare, or other objectionable effects shall be prohibited.
        iii. Activities expected to attract more than one (1) visitor at any given time shall be prohibited.
    c. Cellular, Radio, and Internet Transmission
        i. Cellular, radio, and internet transmission infrastructure shall be subject to the provisions of Article 14: Wireless Communication of the Somerville Zoning Ordinance.
8. Interim Use Category
    a. Subject to approval by the Planning Director, interim uses of vacant LOTS for activities other than surface parking may be permitted for up to 6 months.

6.6.9 Building Types

A. General
    1. FACADES shall be built parallel to a FRONT LOT LINE or to the tangent of a curved FRONT LOT LINE.
    2. Height limits do not apply to mechanical penthouses; cellular, radio, and internet transmission equipment; or vents or exhausts.
    3. The FLOOR PLATE of any story shall not be larger in area than the story below.

B. Residential High-Rise

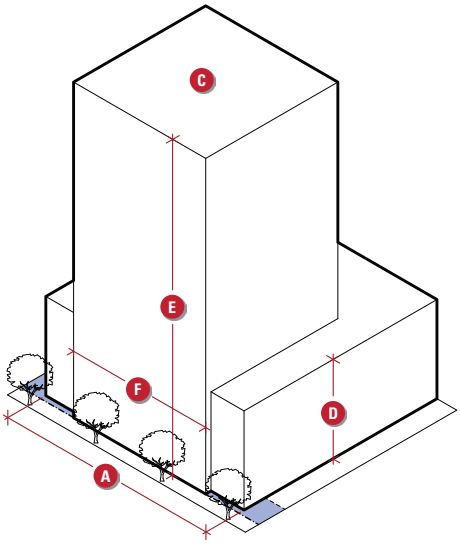

Facade Build-Out Area

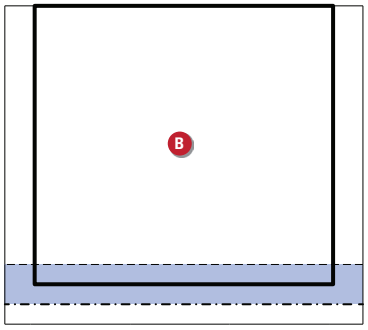

Facade Build-Out Area

	PROCESS	
	a. Plan Submittal	Design and Site Plan
	b. Required Permit	Special Permit
	LOT OCCUPATION	
	a. Setback/Build-to Lines	
	i. Primary Front	0 ft. / 20 ft. max.
	ii. Secondary Front	0 ft. / 20 ft. max.
	FORM	
A	a. Facade Build-Out	80% min.
	b. Floor Plate	
B	i. Up to 65 ft.	45,000 sq. ft. max.
C	ii. Up to 220 ft.	20,000 sq. ft. max.
	c. Height	
D	i. Minimum	3 stories
E	ii. Maximum	220 ft.
F	d. Continuous Facade	100 ft. max.
	FENESTRATION	
	a. Ground Floor	see 6.6.9.B.1.d
	b. Upper Floors	30% min - 50% max.
	c. Blank Wall	20 ft. max.
	SHARED AMENITY SPACE	
	a. Indoor	5% of Lot Area
	b. Outdoor	5% of Lot Area

1. Development Standards
   a. Ground floor residential units shall have individual entrances with access directly onto a sidewalk for each unit.
   b. Ground floor residential uses shall be setback a minimum of ten (10) feet and raised from the average grade of the adjacent sidewalk a minimum of two (2) feet. Portions of the ground floor setback area that are not paved shall be landscaped.
   c. Upper story residential uses shall be accessed by a prominent common lobby entrance separate from the lobby entrance of any other uses.
   d. FACADES shall be glazed with clear glass between thirty percent (30%) and fifty percent (50%) of the wall area of each floor, except for ground floor FACADES for non-residential uses which shall be glazed with clear glass no less than sixty-five (65%) of the wall area between two (2) feet and twelve (12) feet in height.
   e. Towers shall have a maximum horizontal width of one hundred and fifty (150) feet.
   f. Balconies shall be a minimum of five (5) feet in depth and may be inset, projecting, or a part of a terrace.
   g. Outdoor, shared amenity spaces shall be no less than thirty percent (30%) landscaped and may be designed as a mid-BLOCK pedestrian passage, courtyard, entry plaza, or roof terrace.
   h. A minimum of ten percent (10%) of dwelling units shall have three (3) or more bedrooms.

* Diagrams for illustrative purposes only

C. Commercial High-Rise

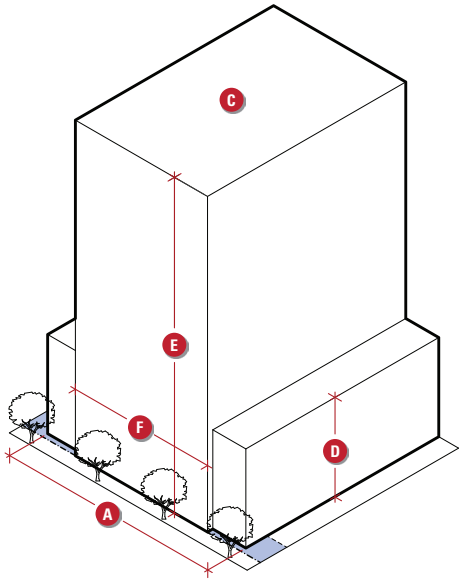

Facade Build-Out Area

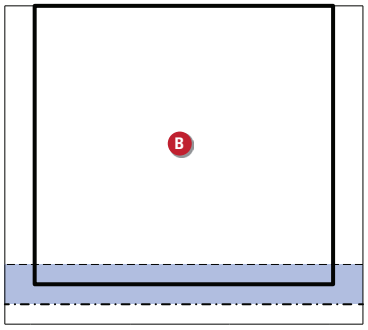

Facade Build-Out Area

	PROCESS	
	a. Plan Submittal	Design and Site Plan
	b. Required Permit	N/A (by-right)
	LOT OCCUPATION	
	a. Setback/Build-to Lines	
	i. Primary Front	0 ft. / 20 ft. max.
	ii. Secondary Front	0 ft. / 20 ft. max.
	FORM	
A	a. Facade Build-Out	80% min.
	b. Floor Plate	
B	i. Up to 65 ft.	45,000 sq. ft. max.
C	ii. Up to 220 ft.	30,000 sq. ft. max.
	c. Height	
D	i. Minimum	4 stories
E	ii. Maximum	220 ft.
F	d. Continuous Facade	100 ft. max.
	FENESTRATION	
	a. Ground Floor, Primary	65% min.
	b. Ground Floor, Secondary	50% min.
	c. Upper Floors	30% min - 50% max.
	d. Blank Wall	20 ft. max.

1. Development Standards
   a. Between sixty percent (60%) and eighty percent (80%) of the ground floor frontage shall be occupied by active uses, including Retail and Consumer Service uses or services provided accessory to Commercial Office, Lodging, and/or R&D/Laboratory principal uses such as a cafe, fitness center, day care, and/or cafeteria open to the public.
   b. Ground floor uses shall be limited to 200 feet of frontage for each use.
   c. Ground floor uses shall have individual entrances with access directly onto a sidewalk for each use.
   d. Upper story uses shall be accessed by a prominent common lobby entrance. Lobby entrances should be well-defined, clearly visible, and universally accessible from the adjacent public sidewalk.
   e. Fenestration shall be calculated for the wall area between two (2) feet and twelve (12) feet in height for ground floor FACADES and the total wall area of each floor for stories above the first.

* Diagrams for illustrative purposes only

D. Commercial Bluilding

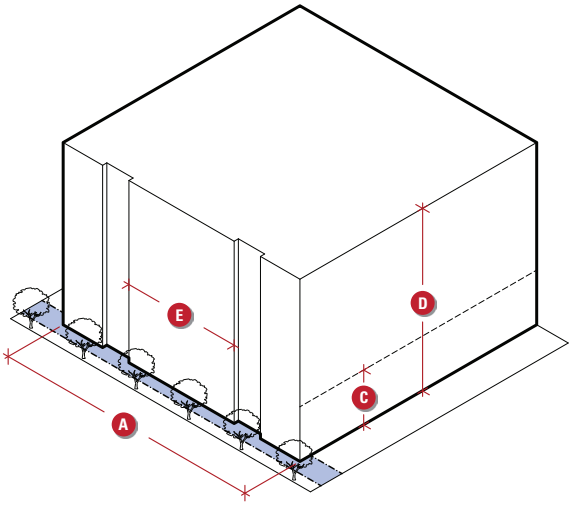

Facade Build-Out Area

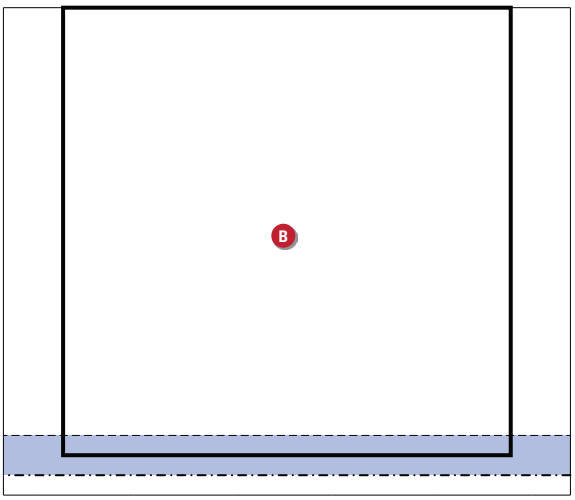

Facade Build-Out Area

	PROCESS	
	a. Plan Submittal	Design and Site Plan
	b. Required Permit	N/A (by-right)
	LOT OCCUPATION	
	a. Setback/Build-to Lines	
	i. Primary Front	0 ft. / 20 ft. max.
	ii. Secondary Front	0 ft. / 20 ft. max.
	FORM	
A	a. Facade Build-Out	80% min.
B	b. Floor Plate	50,000 sq .ft. max.
	c. Height	
C	i. Minimum	4 stories
D	ii. Maximum	150 ft.
E	d. Continuous Facade	100 ft. max.
	FENESTRATION	
	a. Ground Floor, Primary	65% min.
	b. Ground Floor, Secondary	50% min.
	c. Upper Floors	30% min - 50% max.
	d. Blank Wall	20 ft. max.

1. Development Standards
   a. Between sixty percent (60%) and eighty percent (80%) of the ground floor frontage shall be occupied by active uses, including Retail and Consumer Service uses or services provided accessory to commercial, lodging, and/or R&D/laboratory principal uses such as a cafe, fitness center, day care, and/or cafeteria open to the public.
   b. Ground floor uses shall be limited to two-hundred (200) feet of frontage for each use, with the exception that grocery stores/supermarkets may be permitted to occupy more than two-hundred (200) feet of frontage by SPECIAL PERMIT.
   c. Ground floor uses shall have individual entrances with access directly onto a sidewalk for each use.
   d. Upper story uses shall be accessed by a prominent common lobby entrance. Lobby entrances should be well-defined, clearly visible, and universally accessible from the adjacent public sidewalk.
   e. Fenestration shall be calculated for the wall area between two (2) feet and twelve (12) feet in height for ground floor FACADES and the total wall area of each floor for stories above the first.

* Diagrams for illustrative purposes only

E. Design Standards for All Building Types

1. FACADE Articulation

a. Building FACADES shall be articulated vertically with a rhythm of bays between twenty-five (25) feet and fifty (50) feet in width and create an equal, central, and/or ends focused composition as illustrated in Figure 6.6: Vertical Articulation Examples.

Figure 6.6 Vertical Articulation Examples

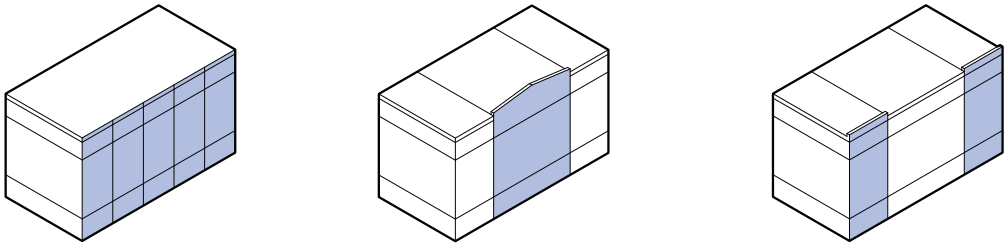

Equal Central Ends

b. FACADES greater than one hundred (100) feet in horizontal width shall have a change in vertical plane of at least four (4) feet (in depth or projection) for at least one (1) bay in width that divides the building form into distinct massing elements that break up its apparent mass.

c. Building FACADES shall be articulated with three clearly defined horizontal elements: a base, middle, and top as illustrated in Figure 6.7: Horizontal Articulation Examples and according to the following:

i. Buildings or portions of buildings (distinct massing elments) four (4) stories or less:

(a) The bottom one to two stories of a building shall be visually integrated as an expression of the building's base. The base shall be visually differentiated from the stories above by a horizontal expression line or cornice and include a change in color, building material, or pattern of fenestration.

(b) The central portion of each FACADE shall be visually integrated as an expression of the building's middle. The middle shall be visually differentiated from the base and top by a by a horizontal expression line or cornice and include a change in color, building material, or pattern of fenestration.

(c) The top story of each FACADE shall have a cornice, parapet, roof element, or change in massing as an expression of the building's top.

ii. Buildings or portions of buildings (distinct massing elments) five (5) stories or more:

(a) The bottom one to three stories of a building shall be visually integrated as an expression of the building's base. The base shall be visually differentiated from the stories above by a horizontal expression line or cornice and include a change in color, building material, or pattern of fenestration.

(b) The central portion of each FACADE shall be visually integrated as an expression of the building's middle. The middle shall be visually differentiated from the base and top by a by a horizontal expression line or cornice and include a change in color, building material, or pattern of fenestration.

(c) The top one to three stories of each FACADE shall be visually integrated as an expression of the building's top. The top shall be visually differentiated from the stories below by a horizontal expression line or cornice; shall include a change in color, building material, or pattern of fenestration; and shall have a cornice, parapet, roof element, or change in massing to cap the composition.

Figure 6.7 Horizontal Articulation Examples

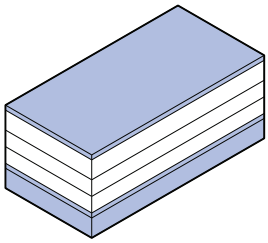

4 Stories or Less

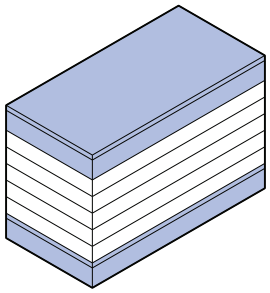

5 Stories or More

2. Fenestration
   a. All openings, including but not limited to doors, balconies, and windows shall be square or vertical in proportion, excluding windows for first floor Retail and Consumer Service or Commercial Office uses.
   b. Each horizontal element of a building (base, middle, and top) shall have a fenestration pattern that is aligned vertically and horizontally to provide order and structure to the composition. The fenestration pattern may differ between the base, middle, and top.
3. Towers
   a. The minimum separation distance between towers on adjacent LOTS and/or for multiple towers built on a single LOT shall be equal to the widest dimension of either towers FLOOR PLATE, to a minimum of eighty (80) ft., measured from the exterior walls and excluding balconies.

6.6.10 Parking and Loading

A. Motor Vehicle Parking
   1. Consistent with the regulatory standard for urban areas and due to close proximity to two (2) rapid transit stations, access to nearby public parking facilities, and a mixture of principal uses that permits the activities of daily life to occur within walking distance of all residences and workplaces within the NPSD, individual uses and development proposals will not be required to provide off-street motor vehicle parking, but may voluntarily elect to provide off-street motor vehicle parking according to Table 6.6.10: Parking Requirements.

B. Bicycle Parking
   1. Short term outdoor bicycle racks shall be provided near the main entrances of any Retail & Consumer Service uses as specified on Table 6.6.10: Parking Requirements.
   2. Sheltered, long-term bicycle parking shall be provided internal to a building for all other use categories as specified on Table 6.6.10: Parking Requirements.

Table 6.6.10 Parking Requirements

USE CATEGORY	MOTOR VEHICLE (Maximum)	BICYCLE (Minimum)
Retail & Consumer Service	.5/1,000 sq. ft.	1/1,000 sq. ft.
Commercial Office & R&D and/or Laboratory	1.25/1,000 sq. ft.	1/5,000 sq. ft.
Lodging	.5/room	n/a
Institutional, Religious, and/or Educational	1/ 4 seats of assembly	1/5,000 sq. ft.
Residential	1/unit	1 per every 2 units

C. Parking Location
   1. All off-street parking spaces shall be located in underground parking structures, except LOTS abutting rail rights-of-way may have above-ground parking structures up to sixty-five (65) feet in height if utilized as an acoustic, visual, and aesthetic barrier between other uses and active rail lines, service yards, and other MBTA operations. Above-ground parking structures shall be subject to §6.6.10.F.
   2. The number of parking spaces provided on any LOT may exceed the maximums allowed per Table 6.6.10 in the following circumstances:
      a. Off street, accessory parking spaces may be provided on a LOT for a use or uses located on any other LOT within the DEVELOPMENT SITE provided that the requirements of Table 6.6.10 are not exceeded in aggregate for

the entire DEVELOPMENT SITE. A development agreement shall be submitted to the Planning Board reducing the maximum parking spaces permitted for any remaining LOT(S) in the DEVELOPMENT SITE by a number equal to the number of spaces being pre-built as a condition of an approved DESIGN AND SITE PLAN.

D. Parking Management
   1. Parking spaces shall be rented, leased, or sold as an option of the rental, lease, or purchase of a dwelling unit or non-residential floor space.
   2. Non-residential uses shall provide employees with a transit subsidy of 100%, up to the maximum allowable transportation fringe benefit.
   3. Non-residential uses shall provide ride-share matching services and preferential parking spaces for carpooling employees.
   4. A transportation kiosk or display, providing information related to transit services in the neighborhood, shall be located within the main lobby area for each residential and non-residential use of any building and near the main pedestrian exit of any parking garage.

E. Parking Access
   1. Pedestrian exits from all parking LOTS and parking structures shall lead directly to a public sidewalk (i.e., not directly into a building) except underground levels which may be exited by pedestrians directly into a building.
   2. Vehicular entrances to parking LOTS or parking structures shall not be permitted along any primary FRONT LOT LINE.
   3. Vehicular entrances to parking LOTS, parking structures, loading docks, and service areas shall be no wider than twenty-four (24) feet along any FRONT LOT LINE.

F. Above-Ground Parking Structures
   1. Above ground parking structures compliant to §6.6.10.C.1 shall be subject to the following standards:
      a. Except for vehicular entrances limited by §6.6.10.E.3, above ground parking structures shall be setback from any FRONT LOT LINE by space designed for occupancy by non-parking uses to a depth of at least thirty (30) feet. Alternatively, the Planning Board may grant a SPECIAL PERMIT to allow above ground parking uses to be masked from view by a well-designed FACADE upon finding that:
         i. signage and way-finding related to the parking area is integrated into the architectural design of the building;
         ii. the FACADE area masking the parking levels is glazed with translucent glass between thirty percent (30%) and fifty percent (50%) of the wall area of each floor;
         iii. any BLANK WALL area is limited to twenty (20) feet in width;
         iv. windows are back-lit in the evening hours; and
         v. the FACADE area masking the parking levels is properly integrated into the vertical and horizontal articulation of the building according to §6.6.9.C Design Standards for All Building Types.

G. Loading Docks and Service Areas
   1. Loading docks and service areas, including trash removal, shall not be permitted along FRONT LOT LINES except by SPECIAL PERMIT.

6.6.11 Environmental Performance

A. Pedestrian level winds shall not exceed an effective gust velocity of 12 mph for outdoor seating areas; 15 mph for bus stops, building entrances, and other areas where pedestrians stand; and 19 mph for any adjacent sidewalk or other pedestrian walkways for more than 1% of the hourly mean wind speed.
B. Buildings shall not cause visual impairment or discomfort due to reflective spot glare and/or solar heat buildup in any nearby buildings.
C. Emissions from any parking facility and/or the heating and mechanical systems of any buildings shall not violate any state or federal ambient air quality standards.
D. Shadows cast by buildings shall not cover more that fifty percent (50%) of the area of any PUBLIC COMMON or PLAZA between the hours of 10AM and 2PM on any day from March 21 to September 21, inclusive, in any calendar year.
E. Construction activities shall be carried out in accordance with the City of Somerville Code of Ordinances Chapter 11 - Public Works and other standards deemed to be appropriate by the Planning Board.
F. Private LOTS, parking areas, and service yards shall be screened from public view and securely protected with a temporary construction fence during all THOROUGHFARE and site work construction. Screening and fencing shall be maintained in good condition at all times.
G. Wind erosion shall be mitigated and controlled through dust abatement and similar practices during site work and construction.