STRUCTURAL STEEL NOTES

1. STRUCTURAL SHAPES:

WIDE FLANGE SHAPES..... ASTM A992, OR ASTM A572 GRADE 50 (Fy = 50,000 PSI)
HOLLOW STRUCTURAL

SECTION (HSS)..... ASTM A500 GRADE B (Fy = 46,000 PSI)

PIPE..... ASTM A53 TYPE E, GRADE B OR ASTM A501

ANCHOR BOLTS..... ASTM A307 OR ASTM F1554 GRADE 36 BOLTS (UON) ON THE DRAWINGS.

WELDING ELECTRODES ..... CONFORM TO AWS SPECIFICATIONS FOR ELECTRODES BASED ON WELDING PROCESS AND THE TYPE AND GRADE OF STEEL.

ERECTION ..... PROVIDE ANCHOR BOLTS, STEEL WEDGES, THREADED SCREWS OR SHIMS TO SUPPORT AND PLUMB ALL COLUMNS. GROUT SOLID UNDER BASE PLATES IMMEDIATELY AFTER COLUMNS ARE PLUMB. PROVIDE BEARING PLATES AND WALL ANCHORS OR ANCHOR BOLTS FOR ALL BEAMS RESTING ON CONCRETE AND ALL OTHER NECESSARY CONNECTING HARDWARE. SET ANCHOR BOLTS USING TEMPLATE DOT NOT FIELD CUT OR FIELD MODIFY ANY STRUCTURAL STEEL WITHOUT PRIOR WRITTEN APPROVAL BY ARCHITECT FOR EACH SPECIFIC CASE.

PAINT ..... SHOP PRIME ALL STEEL NOT ENCASED IN CONCRETE.
FOR ALL EXPOSED STEEL, USE A THREE COAT PAINT SYSTEM WITH A ZINC-RICH PRIMER, ON EPOXY INTERMEDIATE COAT, AND A PROTECTIVE TOP COAT, OR HOT-DIP GALVANIZE THE STEEL AFTER FABRICATION IS COMPLETE.

FABRICATION ..... SHOP FABRICATE TO GREATEST EXTENT POSSIBLE BY WELDING INCLUDING BEAM STIFFENERS, COLUMN CAPS AND BASE, HOLES AND CONNECTIONS. SUBMIT COMPLETE SHOP DRAWINGS FROM FIELD DIMENSIONS FOR THE ARCHITECT'S APPROVAL OF ALL STRUCTURAL STEEL PRIOR TO FABRICATION.

STANDARD SPECIFICATIONS ..... AISC SPECIFICATIONS FOR STRUCTURAL STEEL BUILDINGS, ALLOWABLE STRESS DESIGN AND PLASTIC DESIGN, THE AISC CODE OF STANDARD PRACTICE, AND AWS STRUCTURAL WELDING CODE – STEEL.

CONCRETE WORK:

CONCRETE STRENGTH: PROVIDE THE FOLLOWING 28 DAY COMPRESSIVE STRENGTH FOR FIELD CONCRETE:
4000 PSI NORMAL WEIGHT FOR ALL CAST IN PLACE CONCTETE.

PORTLAND CEMENT: ASTM C150, TYPE II. WATER CEMENT RATIO AS REQUIRED FOR DESIGN STRENGTH.

AGGREGATE: NORMAL WEIGHT : ASTM C35, WITH MAXIMUM SIZE OF ¾".

WATER: POTABLE

SLUMP: ACI TABLE 305A

ADMIXTURE: ASTM C260 AIR-ENTRAINING AGENT AS REQUIRED FOR A TOTAL ENTRAINED AIR CONTENT OF 6% : 1.5% FOR ALL CONCRETE EXPOSED TO FREEZING. DO NOT USED CALCIUM CHLORIDE.

STEEL REINFORCEMENT: ASTM A615 GRADE 60
ASTM A185 FOR WIRE FABRIC.
PROVIDE #6 CHAIR BARS, HIGH CHAIRS, TIES, CLIPS, SLAB BOLSTERS AND OTHER ACCESSORIES WHERE NOT SPECIFIED ON THE DRAWINGS IN ACCORDANCE WITH MANUAL OF STANDARD PRACTICE OR DETAILING REINFORCING CONCRETE STRUCTURES ACI 315 OR CRSI-WRSI MANUAL OF STANDARD PRACTICE. USE PLASTIC TIPS ON ALL CHAIRS PLACED ON THE SIDES OF CONCRETE FORM-WORK.

OPENINGS: PROVIDE 2-#6 AT EACH SIDE OF ALL OPENINGS IN WALLS AND SLABS AND EXTEND 2'-6" BEYOND THE OPENING OR AS DETAILED, EXCEPT VERTICAL BARS AT SIDES OF OPENINGS IN WALLS ARE TO EXTEND FROM FLOOR TO FLOOR. BARS MAY BE MOVED ASIDE AT OPENINGS OR SLEEVES BUT DO NOT CUT OR OMIT.

MINIMUM CONCRETE COVER:
CONCRETE PLACED AGAINST EARTH ..... 3"
SLAB ON GRADE BOTTOM ..... 1 ½"
SLAB ON GRADE TOP ..... 1"
FORMED CONCRETE EXPOSED TO EARTH, WATER OR WEATHER..... 2"
FORMED SLABS TOP AND BOTTOM ..... 1"
INTERIOR FACES OF WALLS ..... 1"
COLUMNS OR PIERS (MAIN REINFORCEMENT) ..... 2"

SPLICING OF REINFORCEMENT: AS SHOWN ON PLANS BUT NOT LESS THAN 40 DIAMETERS FOR SLABS AND BEAM BOTTOM BARS, AND NOT LESS THAN 48 BAR DIAMETERS FOR WALLS AND BEAM TOP BARS. PROVIDE A LAP OF 8" OR 1 ½ SPACES, WHICHEVER IS LARGER, FOR WWF. TIE WIRES TOGETHER AT LAP.

MINIMUM REINFORCEMENT: REINFORCE ALL WALLS WITH #4 @ 12" IN EACH WAY EACH FACE AND 2 – #6 EACH EDGE, U.N.O. IN SLABS, PROVIDE AT LEAST 0.0018 TIMES THE AREA OF CONCRETE IN EACH DIRECTION, U.N.O.

SHOP DRAWINGS: SUBMIT FOR DESIGNER'S APPROVAL COMPLETE BENDING AND PLACING DETAILS AT ALL REINFORCING STEEL INCLUDING WELDED WIRE FABRIC (WWF), INCLUDING POSITION OF SPLICES. INCLUDE ACCESSORY DRAWINGS.

STANDARD SPECIFICATIONS: COMPLY WITH THE LATEST RECOMMENDATIONS AND SPECIFICATIONS OF THE AMERICAN CONCRETE INSTITUTE.
ACI 301 ..... STRUCTURAL CONCRETE FOR BUILDINGS
ACI 302 ..... CONCRETE FLOOR AND SLAB CONSTRUCTION
ACI 304 ..... MEASURING, MIXING, TRANSPORTING AND PLACING CONCRETE
ACI 305 ..... HOT WEATHER CONCRETING
ACI 306 ..... COLD WEATHER CONCRETING
ACI 315 ..... DETAILING REINFORCING STEEL
ACI 318 ..... GENERAL DESIGN OF ITEMS NOT OTHERWISE SPECIFIED
ACI 347 ..... FORMWORK
CRSI ..... MANUAL OF STANDARD PRACTICE.

CONSTRUCTION JOINTS: PROVIDE KEYS AND DOWELS AT ALL CONSTRUCTION JOINTS. PROVIDE DOWELS WITH AN AREA EQUAL TO 0.003 TIMES THE CONCRETE CROSS SECTIONAL AREA AT CONSTRUCTION JOINT. SUBMIT THE PROPOSED LOCATION OF CONSTRUCTION JOINTS TO THE DESIGNER FOR APPROVAL. MAXIMUM SPACING OF CONSTRUCTION JOINTS TO BE 30 FEET FOR WALLS AND STRUCTURAL FLOORS AND 20 FEET FOR SLABS ON GRADE.

SURFACE TREATMENT: ROUGHEN ALL EXISTING CONCRETE SURFACES COMMON WITH NEW CONCRETE TO AN AMPLITUDE OF ¼"

REBAR ANCHORING SYSTEMS: DRILL AND EPOXY GROUT REBAR INTO EXISTING FOOTINGS USING HILTI HVA ADHESIVE SYSTEM OR APPROVED EQUAL.

CONCRETE UNIT MASONRY:

DESIGN STRENGTH ..... f'm = 1500 PSI

BLOCK ..... HOLLOW LOAD BEARING MASONRY UNITS
ASTM C90. 4000 PSI MINIMUM STRENGTH.
ALL BLOCK TO BE 2 CORE TYPE.

WATER ..... POTABLE

MASON'S SAND ..... ASTM C144, FINENESS MODULUS 2.0 TO 2.5

HYDRATED LIME ..... ASTM C207, TYPE S

PORTLAND CEMENT ..... ASTM C150, TYPE I OR II

MORTAR ..... ASTM C270, TYPE S. PROPORTION MIX BY VOLUME 1:1½:3
(PORTLAND CEMENT:HYDRATED LIME:MASON'S SAND.

REINFORCING AND GROUTING ..... REINFORCING BARS: ASTM A615 GRADE 60
JOINT REINFORCING: DUR-O-WAL STANDARD TRUSS FOR 8" WALLS AND DUR-O-WAL EXTRA HEAVY TRUSS IN 12" WALLS.

GROUT ALL BOND BEAMS , REINFORCED VERTICAL CORES, AND ANY UNREINFORCED CORES INDICATED TO RECEIVE GROUTING ON THE DRAWINGS
MAXIMUM GROUT HEIGHT: 1 STORY

MINIMUM REINFORCEMENT: UON ON THE DRAWINGS, ALL LOAD BEARING CMU WALLS ARE TO BE REINFORCED HORIZONTALLY WITH JOINT REINFORCING IN EVERY OTHER COURSE, A BOND BEAM AT 8 FEET O.C. WITH ONE CONTINUOUS #5 FOR 8" WALLS OR ONE #6 FOR 12" WALLS. VERTICALLY PROVIDE #6 AT 3'-4" O.C. FOR 8" WALLS AND ONE #6 AT 2'-8" O.C. FOR 12" WALLS.
SPLICE: MINIMUM OF 48 BAR DIAMETERS.

SHOP DRAWINGS ..... SUBMIT FOR DESIGNER'S APPROVAL COMPLETE BENDING AND PLACING DETAILS OF ALL REINFORCING STEEL INDICATING POSITION OF SPLICES AND LOCATION OF REINFORCEMENT AND GROUT IN MASONRY.

STANDARD SPECIFICATIONS .... COMPLY WITH THE LATEST RECOMMENDATIONS AND SPECIFICATIONS OF THE:
ACI 530 / ASCE 5 / TMS 402 AND ACI 530.1 / ASCE 6 / TMS 602

GENERAL STRUCTURAL NOTES:

PROCEDURES:

DESIGN DOCUMENTS: THESE CONTRACT DOCUMENTS FOR STRUCTURAL WORK INCLUDE THESE S-SERIES DRAWINGS AND GENERAL NOTES, AND ANY CONTRACT CONDITIONS SUPPLIED BY THE OWNER. THERE ARE NO TECHNICAL SPECIFICATIONS IN ADDITION TO THESE GENERAL NOTES.

1. THE CONTRACTOR SHALL COORDINATE THE STRUCTURAL CONTRACT DOCUMENTS WITH CIVIL, ARCHITECTURAL, MECHANICAL, PLUMBING, AND ELECTRICAL DRAWINGS BEFORE COMMENCEMENT OF WORK AND SHALL NOTIFY THE ENGINEER OF ANY CONFLICTS.
2. THESE CONTRACT DOCUMENTS FOR STRUCTURAL WORK INCLUDE THESE S-SERIES DRAWINGS AND GENERAL NOTES, AND ANY CONTRACT CONDITIONS SUPPLIED BY THE OWNER. THERE ARE NO TECHNICAL SPECIFICATIONS IN ADDITION TO THESE GENERAL NOTES.
3. STRUCTURAL FIELD CONDITIONS ARE TO BE REFERRED TO THE ENGINEER OF RECORD FOR REVIEW PRIOR TO INSTALLATION OF WORK RELATED TO THE FIELD CONDITION. STRUCTURAL FIELD CONDITIONS MAY OCCUR WHERE THE EXISTING CONDITION DIFFERS FROM THE REFERENCE PLANS, OR WHERE THE EXISTING CONDITION OR OBSTRUCTIONS REQUIRE MODIFICATION OF THE WORK AS SHOWN ON THESE DRAWINGS.
4. THE OWNER SHALL PROVIDE STRUCTURAL INSPECTION FOR ALL STRUCTURAL WORK AS REQUIRED BY THE MASSACHUSETTS BUILDING CODE. CONTRACTOR TO PROVIDE FULL AND AMPLE MEANS AND ASSISTANCE FOR TESTING MATERIAL AND WORKMANSHIP AND PROPER FACILITIES FOR INSPECTION OF THE WORK IN THE SHOP AND IN THE FIELD.
5. NOTIFY THE ENGINEER OF RECORD IMMEDIATELY IF EXISTING CONDITIONS VARY FROM THAT SHOWN ON THE DRAWINGS IN A MANNER THAT PRECLUDES EXECUTION OF THE WORK AS SHOWN.
6. ALL ELEVATIONS AND DIMENSIONS SHOWN FOR NEW CONSTRUCTION ARE BASED ON FIELD INVESTIGATION OF THE EXISTING BUILDING. VERIFICATION AND DOCUMENTATION OF EXISTING SITE CONDITIONS SHALL BE COMPLETED PRIOR TO FABRICATION. CONTRACTOR IS RESPONSIBLE FOR DIMENSIONS AND FIT.
7. CONTRACTOR SHALL DOCUMENT EXISTING DIMENSIONS, MEMBER SIZES AND STRUCTURAL FIELD CONDITIONS AS APPROPRIATE, SHALL PROVIDE COPIES OF THIS FIELD DOCUMENTATION TO THE E.O.R. AND THE STRUCTURAL INSPECTOR , AND SHALL RETAIN A RECORD OFFICE COPY AND A FIELD COPY OF THE SAME.
8. WRITTEN CORRESPONDENCE, DRAWINGS, AND SKETCHES IDENTIFYING STRUCTURAL MODIFICATIONS AS A RESULT OF EXISTING DIMENSIONS, MEMBER SIZES AND STRUCTURAL ISSUES SHALL BE PROVIDED BY THE ARCHITECT FOR USE BY THE CONTRACTOR AND STRUCTURAL INSPECTOR. THE CONTRACTOR SHALL RETAIN A RECORD OFFICE COPY OF ALL MODIFICATIONS.
9. CONTRACTOR IS TO PROVIDE ANY TEMPORARY SHORING AND BRACING NECESSARY TO MAINTAIN SAFETY AND STABILITY OF STRUCTURE DURING CONSTRUCTION.
10. THE CONTRACTOR IS RESPONSIBLE FOR ALL MEANS AND METHODS. PROTECT THE BUILDING AND INTERIOR AREAS DURING THE WORK FROM ALL RISKS ASSOCIATED WITH THE WORK. ALL EQUIPMENT USED ON THE PROJECT SHALL COMPLY APPLICABLE MUNICIPAL AND SAFETY REGULATIONS, INCLUDING OSHA GUIDE LINES. THE CONTRACTOR SHALL PROVIDE FOR THE SAFETY OF THE GENERAL PUBLIC IN THE VICINTY OF ALL WORK AREAS. TAKE ADEQUATE PROTECTION AGAINST FIRE DURING FIELD WELDING, INCLUDING, BUT NOT LIMITED TO, ADEQUATE FIRE WATCHES.
11. ELEVATIONS AND DIMENSIONS:
FIELD VERIFY ALL ELEVATIONS AND DIMENSIONS BEFORE PROCEEDING WITH CONSTRUCTION.

BUILDING CODE:
MASSACHUSETTS STATE BUILDING CODE 780 CMR , 8th EDITION.

TYPICAL DETAILS:
DETAILS NOTED AS "TYPICAL" ON STRUCTURAL DRAWINGS ARE FOR USE IN CONDITIONS WHERE SPECIFIC DETAILS ARE NOT REFERENCED ON PLANS.

DESIGN CRITERIA

DEAD LOAD – ACTUAL WEIGHT OF CONSTRUCTION MATERIALS
APPLICATION COMPONENTS AND MECHANICAL EQUIPMENT SUPPORT

SNOW LOADS

A. GROUND SNOW LOAD Pg = 45 PSF
B. ROOF DESIGN SNOW LOAD Pf = 30 PSF
C. DRIFTING PER CODE REQUIREMENTS

WIND LOADS (ASCE7-05)

A. BASIC WIND SPEED (V30) = 100 MPH
B. BUILDING CATEGORY = II
C. BUILDING HEIGHT = < 100 FEET
D. IMPORTANCE FACTOR = 1
E. EXPOSURE = B
F. BASIC WIND PRESSURE = 28.3 PSF

EARTHQUAKE LOADS

A.	SEISMIC IMPORTANCE FACTOR	Ie	1.00
B.	MAPPED SPECTRAL RESPONSE ACCELERATION	Ss	0.25
C.	MAPPED SPECTRAL RESPONSE ACCELERATION	S1	0.064
D.	SPECTRAL RESPONSE COEFFICIENT	Sds	0.29
E.	SPECTRAL RESPONSE COEFFICIENT	Sd1	0.108
F.	SITE CLASS (ASSUMED)	D	
G.	SEISMIC DESIGN CATEGORY	B	
H.	STRUCTURAL STEEL SYSTEM N/A		
I.	REQUIRED TO BE DETAILED FOR SEISMIC		
J.	RESPONSE MODIFICATION FACTOR	p RP	.5 (a = 1.0)

FOUNDATIONS:

A. SOIL BEARING:
SPREAD FOOTINGS..... DESIGNED FOR A MAXIMUM ALLOWABLE BEARING PRESSURE OF 1.0 TSF

B. EXCAVATION..... EXCAVATE TO LINES AND GRADES TO PROPERLY INSTALL FOUNDATIONS ON UNRESTRICTED SOIL. IN NO CASE SHALL THE BOTTOM OF FOOTING BE LOCATED LESS THAN 4'-0" BELOW THE LOWEST ADJACENT SURFACE EXPOSED TO FREEZING.

C. BACKFILL UNDER SLAB OR GRADE..... BACKFILL WHERE REQUIRED BELOW SLABS WITH APPROVED GRANULAR SOIL PLACED IN 6" LAYERS AND COMPACTED TO 95x DENSITY AT OPTIMUM MOISTURE CONTENT AS DEFINED BY ASTM D-1557, METHOD D.

D. FOUNDATION PLACEMENT AND PROTECTION..... DO NOT PLACE FOUNDATION CONCRETE IN WATER OR ON FROZEN GROUND. PROTECT IN-PLACE FOUNDATIONS AND SLABS FROM FROST PENETRATION UNTIL THE PROJECT IS COMPLETE. DO NOT EXCAVATE WITHOUT ENGINEER'S WRITTEN PERMISSION. ANY SOILS BELOW HYPOTHETICAL PLANES BEGINNING AT THE BOTTOM EDGE OF EXISTING FOOTINGS AND EXTENDING DOWNWARDS AND AWAY FROM THE FOOTING AT A 1:1 SLOPE.

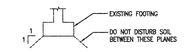

RJ Farah Engineering, Inc
STRUCTURAL ENGINEERS

ADDRESS:
80 MONTVALE AVENUE
SUITE 201
STONEHAM, MA 02180
T 617.645.0901

CLIENT:

REGENCY CENTERS PROPERTIES

1919 GALLOWS ROAD
SUITE 1000
VIENNA, VA, 22182

TWIN CITY PLAZA:

22 McGRATH HIGHWAY

SOMERVILLE, MA 02143

REV	DATE	DESCRIPTION

DRAWING ISSUE: FOR PREMIT & CONSTRUCTION
ISSUE DATE: 06/30/2014

SEAL:

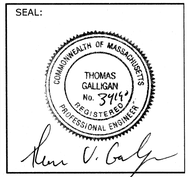

DRAWN BY:	R.H.
CHECKED BY:	T.V.G.
SCALE:	AS NOTED
JOB NO:	R14007
DATE:	06/30/2014

DRAWING TITLE:

GENERAL NOTES

SHEET NO.:

S000

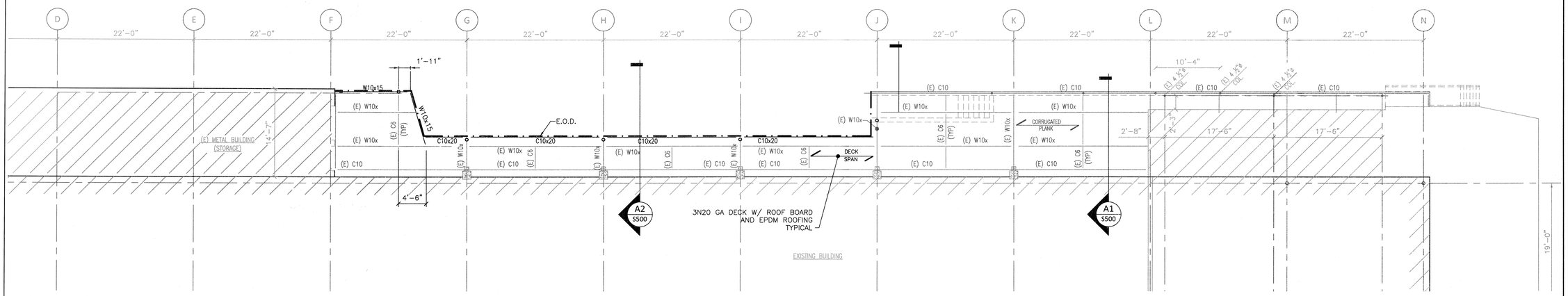

PARTIAL CANOPY ROOF FRAMING PLAN 1/8" = 1'-0" **B1**

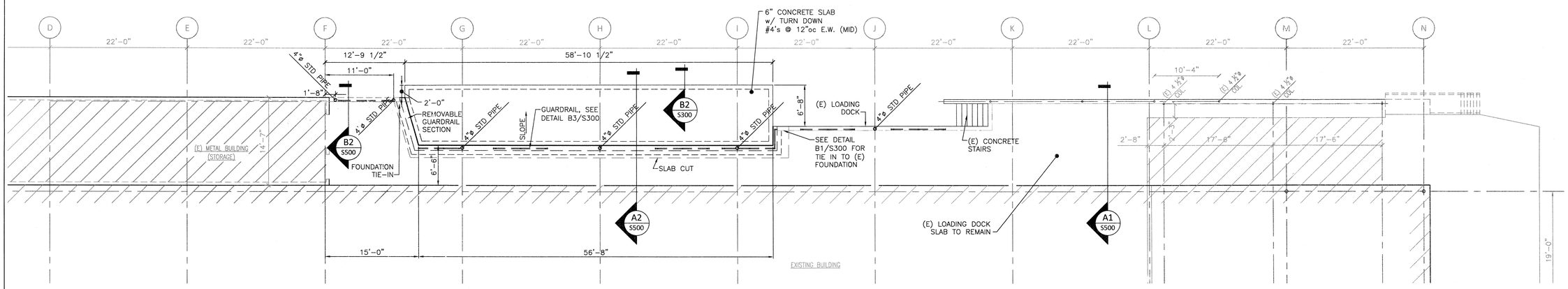

PARTIAL FOUNDATION PLAN 1/8" = 1'-0" **B1**

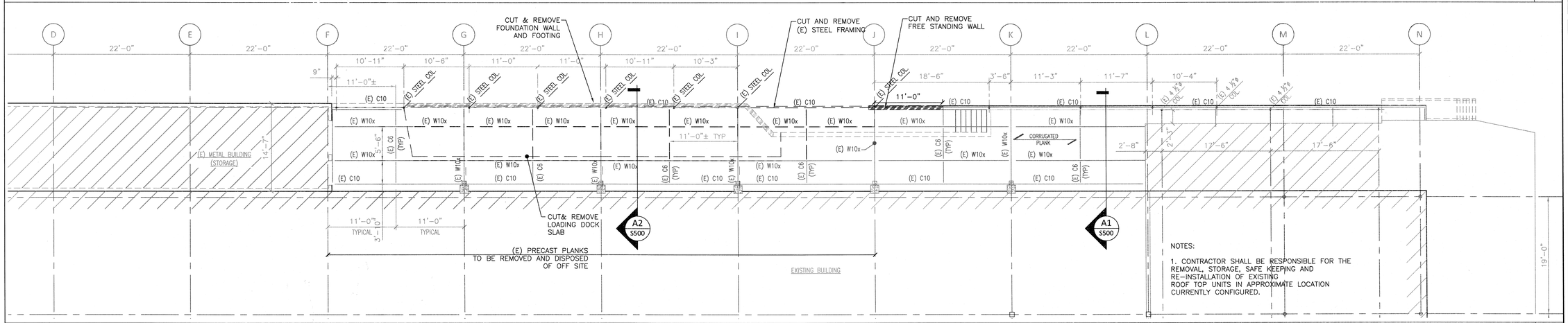

NOTES:

1. CONTRACTOR SHALL BE RESPONSIBLE FOR THE REMOVAL, STORAGE, SAFE KEEPING AND RE-INSTALLATION OF EXISTING ROOF TOP UNITS IN APPROXIMATE LOCATION CURRENTLY CONFIGURED.

PARTIAL DEMOLITION PLAN 1/8" = 1'-0" **A1**

RJ Farah Engineering, Inc
STRUCTURAL ENGINEERS

ADDRESS:
80 MONTVALE AVENUE
SUITE 201
STONEHAM, MA 02180
T 617.645.0901

CLIENT:

REGENCY CENTERS PROPERTIES

1919 GALLOWS ROAD
SUITE 1000
VIENNA, VA, 22182

TWIN CITY PLAZA:

22 McGRATH HIGHWAY
SOMERVILLE, MA 02143

REV	DATE	DESCRIPTION

DRAWING ISSUE: FOR PERMIT & CONSTRUCTION
ISSUE DATE: 06.30.2014

SEAL:

COMMONWEALTH OF MASSACHUSETTS
THOMAS GALLIGAN
No. 37176
REGISTERED PROFESSIONAL ENGINEER

DRAWN BY:	R.H.
CHECKED BY:	T.V.G.
SCALE:	AS NOTED
JOB NO:	R14007
DATE:	06/30/2014

DRAWING TITLE:

FRAMING PLANS

SHEET NO.:

S100

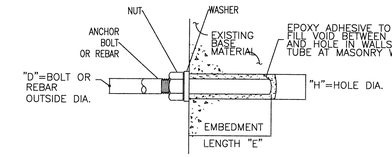

NOTES:

1. DRILL HOLES, CLEAN OUT AND INSTALL EPOXY AND BOLT OR REBAR IN STRICT CONFORMANCE OF EPOXY MANUFACTURER'S WRITTEN RECOMMENDATIONS. REFER TO SPECIFICATION SECTION 03300 FOR ADDITIONAL EPOXY REQUIREMENTS.

2. UNLESS OTHERWISE INDICATED ON DRAWINGS, PROVIDE THE EMBEDMENT LENGTH AND HOLE DIAMETER INDICATED IN THE SCHEDULE (THIS SHEET), FOR THE BOLT OR REBAR SIZE INDICATED ON THE DRAWINGS.

3. EPOXY BOND STRENGTH IS TO BE BASED ON A SAFETY FACTOR (S.F.) OF 4.0.

	BOLT OR REBAR OUTSIDE DIAMETER "D" (INCHES)	REQUIRED EMBEDMENT LENGTH "E" (INCHES)	REQUIRED HOLE DIAMETER "H" (INCHES)
ANCHOR BOLTS	3/8	3 3/8	7/16
	1/2	4 1/2	9/16
	5/8	5 5/8	3/4
	3/4	6 3/4	7/8
	7/8	7 7/8	1
	1	9	1 1/8
	1 1/4	11 1/4	1 3/8
	1 1/2	13 1/2	1 5/8
REBAR	#3 BAR	4 1/2	1/2
	#4 BAR	6	5/8
	#5 BAR	7 1/2	3/4
	#6 BAR	9	7/8
	#7 BAR	10 1/2	1
	#8 BAR	12	1 1/8
	#9 BAR	13 1/2	1 3/8

EPOXY DETAIL

NOT USED 1/2" = 1'-0" **C4**

NOT USED 1/2" = 1'-0" **C3**

EPOXY FASTENER SCHEDULE NA **C1**

NOTES:
1. RAILINGS SHALL BE 1 1/2" SCHEDULE 40 PAINTED STEEL PIPE , ASTM-B-429 OR ASTM-B-221. POSTS SHALL BE 1 1/2" SCHEDULE 40 PAINTED STEEL PIPE . POST SPACING SHALL BE A MAXIMUM OF 6'-0".

2. GUARDRAILS AND HANDRAILS SHALL BE DESIGNED TO WITHSTAND A 200 LB CONCENTRATED LOAD APPLIED IN ANY DIRECTION AND AT ANY POINT ON THE TOP RAIL.

3. THE MID-RAIL AT A CORNER RETURN SHALL BE ABLE TO WITHSTAND A 200 LB LOAD WITHOUT LOOSENING. THE MANUFACTURER IS TO DETERMINE THIS DIMENSION FOR THEIR SYSTEM AND PROVIDE PHYSICAL LABORATORY TESTS TO CONFIRM COMPLIANCE.

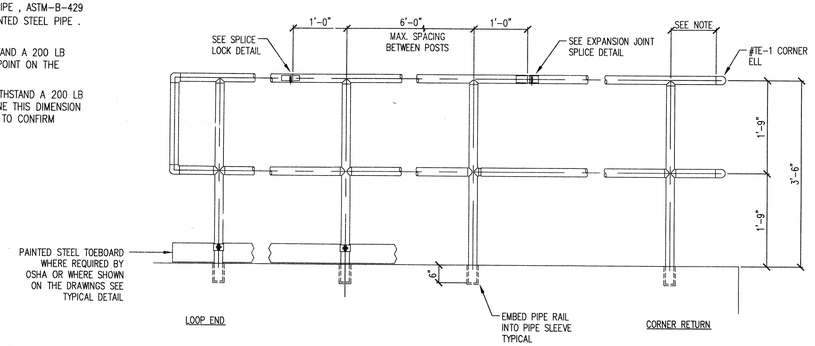

TYPICAL GUARD RAIL ELEVATION 1/2" = 1'-0" **B3**

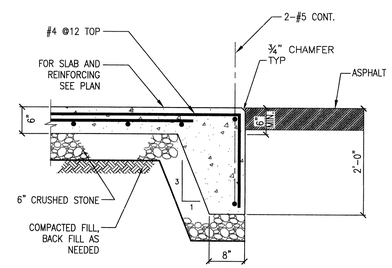

SLAB TURN DOWN DETAIL 3/4" = 1'-0" **B2**

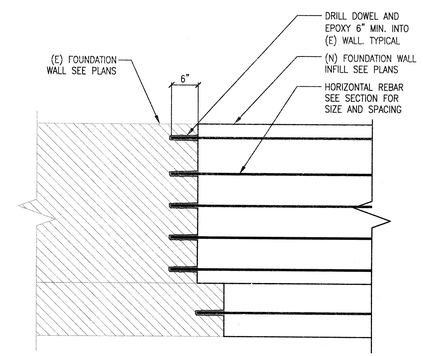

DETAIL AT (N) FOUND. TO (E) FOUND CONN. 3/4" = 1'-0" **B1**

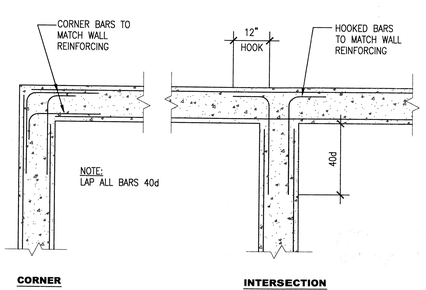

TYPICAL WALL REINFORCING DETAIL 1/2" = 1'-0" **A4**

NOTES:
1. LOCATE CONSTRUCTION JOINT AT 100 FEET MAX. O.C. AND NOT LESS THAN 20 FEET FROM ANY CORNER OR LESS THAN 10 FEET FROM ANY COLUMN.

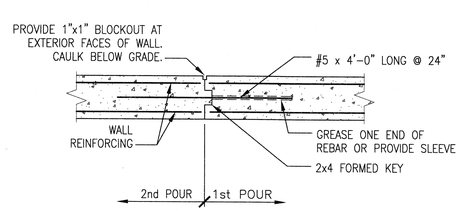

TYPICAL WALL CONSTRUCTION JOINT DETAIL 1/2" = 1'-0" **A3**

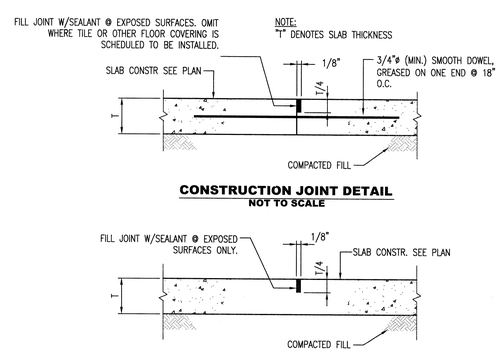

TYPICAL SLAB JOINT DETAILS 1 1/2" = 1'-0" **A2**

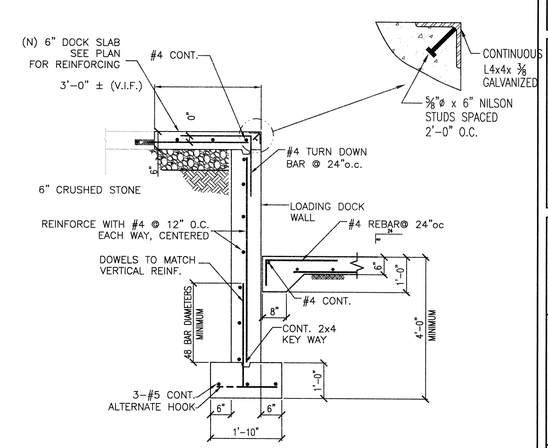

SECTION AT LOADING DOCK ADDITION 3/4" = 1'-0" **A1**

RJ Farah Engineering, Inc
STRUCTURAL ENGINEERS
ADDRESS:
80 MONTVALE AVENUE
SUITE 201
STONEHAM, MA 02180
T 617.645.0901

CLIENT:
REGENCY CENTERS PROPERTIES
1919 GALLOWS ROAD
SUITE 1000
VIENNA, VA, 22182

TWIN CITY PLAZA:
22 McGRATH HIGHWAY
SOMERVILLE, MA 02143

REV	DATE	DESCRIPTION

DRAWING ISSUE: FOR PERMIT & CONSTRUCTION
ISSUE DATE: 06.30.2014

SEAL:
COMMONWEALTH OF MASSACHUSETTS
THOMAS GALLIGAN
No. 37164
REGISTERED PROFESSIONAL ENGINEER

DRAWN BY:	R.H.
CHECKED BY:	T.V.G.
SCALE:	AS NOTED
JOB NO:	R14007
DATE:	06/30/2014

DRAWING TITLE:
CONCRETE DETAILS

SHEET NO.:
S300

RJ Farah Engineering, Inc
STRUCTURAL ENGINEERS

ADDRESS:
80 MONTVALE AVENUE
SUITE 201
STONEHAM, MA 02180
T: 617.645.0901

CLIENT:

REGENCY CENTERS PROPERTIES

1919 GALLOWS ROAD
SUITE 1000
VIENNA, VA, 22182

TWIN CITY PLAZA:

22 McGRATH HIGHWAY
SOMERVILLE, MA 02143

NOT USED NA **B4**

NOT USED NA **B3**

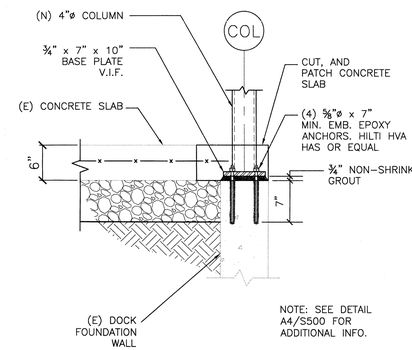

COLUMN CONNECTION AT (E) FOUNDATION 1/8"=1'-0" **B2**

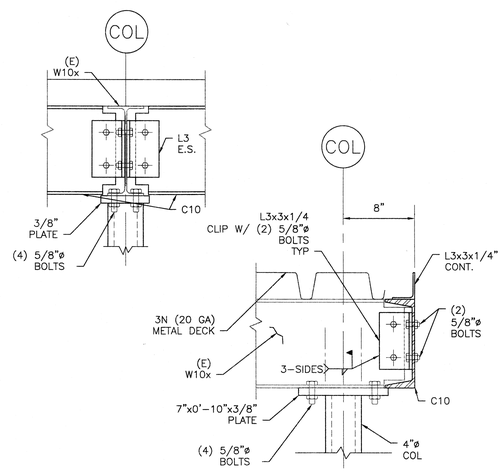

STEEL SECTION 1/8"=1'-0" **B1**

NOT USED NA **A4**

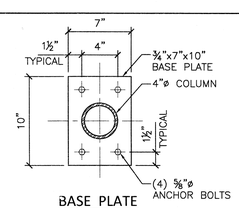

BASE PLATE

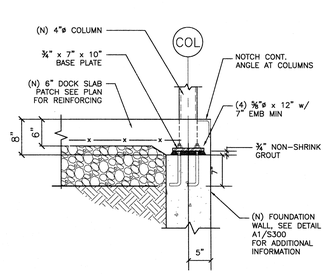

SECTION 1"=1'-0" **A3**

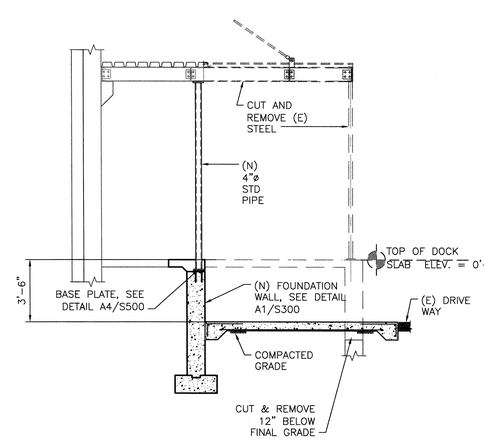

TYPICAL (N) DOCK AND CANOPY SECTION 1/4"=1'-0" **A2**

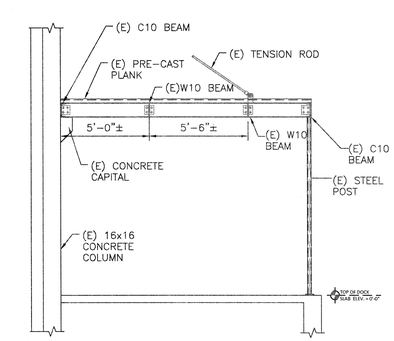

TYPICAL (E) DOCK AND CANOPY SECTION 1/4"=1'-0" **A1**

REV	DATE	DESCRIPTION

DRAWING ISSUE: FOR PERMIT & CONSTRUCTION
ISSUE DATE: 06.30.2014

SEAL:

DRAWN BY:	R.H.
CHECKED BY:	T.V.G.
SCALE:	AS NOTED
JOB NO:	R14007
DATE:	06/30/2014

DRAWING TITLE:

PART PLAN TYPICAL SECTIONS AND DETAILS

SHEET NO.:

S500