Sprint

PROJECT:	2.5 EQUIPMENT DEPLOYMENT
SITE NAME:	TAGE INN
SITE CASCADE:	BS54XC903
MARKET:	BOSTON
SITE ADDRESS:	844 McGRATH HIGHWAY SOMERVILLE, MA 02143
SITE TYPE:	ROOFTOP

Sprint VISION
1 INTERNATIONAL BLVD, SUITE 800
MAHWAH, NJ 07495
(201) 684-4000

J LEE ASSOCIATES, LLC
753 FOREST STREET
MARLBOROUGH, MA 01752-3047
PHONE: (800) 825-6460
www.guardian-energy.com

ADVANCED ENGINEERING GROUP, P.C.
Civil Engineering - Site Development
Surveying - Telecommunications
500 NORTH BROADWAY
EAST PROVIDENCE, RI 02914
PH: 401-354-2403
FAX: 401-633-6354

SITE INFORMATION

PROPERTY OWNER:
CUMMINGS-MIDDLESEX SOMERVILLE LLC
P.O. BOX 386
WESTON, MA 02493

TOWER OWNER:
N/A (ROOFTOP)

LATITUDE (NAD83):
GOOGLE EARTH 2-C CONFIRMATION
42° 23' 39.999" N
42.394389°

LONGITUDE (NAD83):
GOOGLE EARTH 2-C CONFIRMATION
-71° 05' 4.300" W
-71.084833°

COUNTY:
MIDDLESEX

ZONING JURISDICTION:
CITY OF SOMERVILLE

ZONING DISTRICT:
ASSEMBLY SQUARE MIXED-USE DISTRICT (ASMD)

POWER COMPANY:
NSTAR ELECTRIC

AAV PROVIDER:
COMCAST

SPRINT CONSTRUCTION MANAGER:
RONALD HIBBARD
PHONE: 774-269-8812
ronald.hibbard@sprint.com

EQUIPMENT SUPPLIER:
ALCATEL-LUCENT
600 MOUNTAIN AVENUE
MURRAY HILL, NJ 07974

AREA MAP

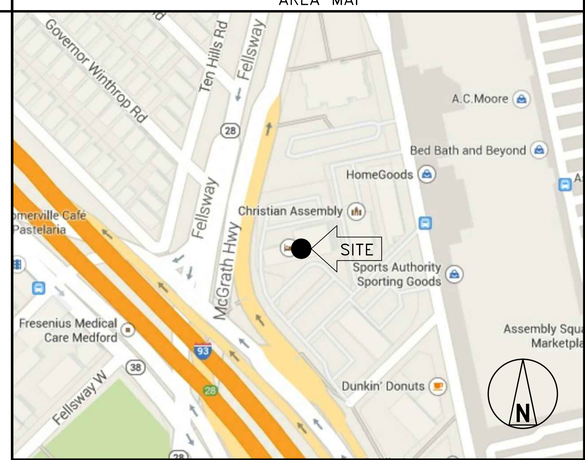

LOCATION MAP GOOGLE EARTH 2-C CONFIRMATION

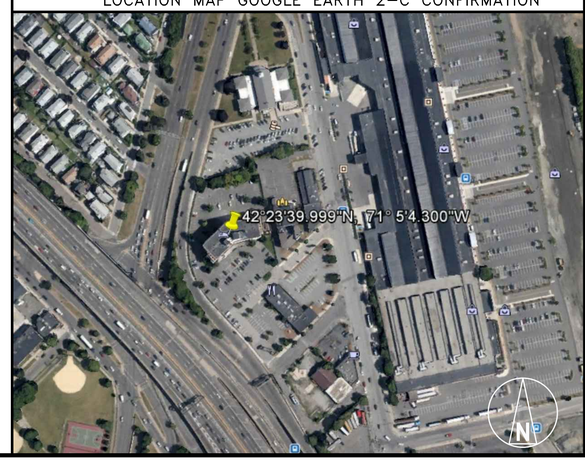

PROJECT DESCRIPTION

SPRINT EQUIPMENT MODIFICATIONS REQUIRED TO SUPPORT MODERNIZATION OF AN EXISTING WIRELESS COMMUNICATIONS FACILITY AND UTILIZATION OF FCC BROADBAND SPECTRUM LICENSE FOR 2.5GHz FREQUENCY, INCLUDING INSTALLATION OF:

GROUND-LEVEL RAN EQUIPMENT, CONSISTING OF
* RETROFIT EXISTING MMBTS CABINET WITH 2.5 RADIO ACCESS NETWORK (RAN) EQUIPMENT
* (1) ADDITIONAL BATTERY STRING(S) INSIDE PROPOSED GROWTH CABINET
* (1) ALU 9929 GROWTH CABINET

TOWER-TOP EQUIPMENT, INCLUDING INSTALLATION OF:
* (3) PANEL ANTENNAS
* (3) REMOTE RADIO HEADS (RRH)
* (2) FIBER ONLY CABLES (AND ASSOCIATED FIBER, DC POWER, COAXIAL CABLE JUMPERS AND ANTENNA REMOTE ELECTRICAL-TILT (RET) CABLE

SPECIAL ZONING NOTE:
BASED ON INFORMATION PROVIDE BY SPRINT REGULATORY COMPLIANCE PROFESSIONALS AND LEGAL COUNSEL, THIS TELECOMMUNICATIONS EQUIPMENT DEPLOYMENT IS CONSIDERED AND ELIGIBLE FACILITY UNDER THE TAX RELIEF ACT OF 2012, 47 USC 1455(A), AND IS SUBJECT TO AN EXPEDITED ELIGIBLE FACILITIES REQUEST/REVIEW AND ZONING PRE-EMPTION FOR LOCAL DISCRETIONARY PERMITS (VARIANCE, SPECIAL PERMIT, SITE PLAN REVIEW, ADMINISTRATIVE REVIEW).

GENERAL NOTES

1. THIS IS AN UNMANNED TELECOMMUNICATION FACILITY AND NOT FOR HUMAN HABITATION:
- ADA COMPLIANCE NOT REQUIRED.
- POTABLE WATER OR SANITARY SERVICE IS NOT REQUIRED.
- NO OUTDOOR STORAGE OR ANY SOLID WASTE RECEPTACLES REQUIRED.
2. CONTRACTOR SHALL VERIFY ALL PLANS, EXISTING DIMENSIONS, AND CONDITIONS ON JOB SITE. CONTRACTOR SHALL IMMEDIATELY NOTIFY THE ARCHITECT/ENGINEER IN WRITING OF ANY DISCREPANCIES BEFORE PROCEEDING WITH THE WORK. FAILURE TO NOTIFY THE ARCHITECT/ENGINEER PLACE THE RESPONSIBILITY ON THE CONTRACTOR TO CORRECT THE DISCREPANCIES AT THE CONTRACTOR'S EXPENSE.
3. NEW CONSTRUCTION WILL CONFORM TO ALL APPLICABLE CODES AND ORDINANCES.
BUILDING CODE: MASSACHUSETTS STATE BUILDING CODE 8TH EDITION
ELECTRICAL CODE: 2005 NATIONAL ELECTRICAL CODE
STRUCTURAL CODE: TIA/EIA-222-G STRUCTURAL STANDARDS FOR ANTENNA SUPPORTING STRUCTURES AND ANTENNAS.

811 Know what's below. Call before you dig.
www.cbyd.com

DRAWING INDEX

SHEET NO:	SHEET TITLE	REV	CHK	BY
T-1	TITLE SHEET	1	MRC	AAB
SP-1	OUTLINE SPECIFICATIONS	1	MRC	AAB
SP-2	OUTLINE SPECIFICATIONS	1	MRC	AAB
SP-3	OUTLINE SPECIFICATIONS	1	MRC	AAB
A-1	ROOF PLAN	1	MRC	AAB
A-2	ELEVATION	1	MRC	AAB
A-3	ANTENNA PLANS & DETAILS	1	MRC	AAB
A-4	EQUIPMENT PLAN & DETAILS	1	MRC	AAB
A-5	RF DATA SHEET & BILL OF MATERIALS	1	MRC	AAB
A-6	WIRING DIAGRAMS	1	MRC	AAB
S-1	STRUCTURAL & EQUIPMENT DETAILS	1	MRC	AAB
E-1	ONE LINE DIAGRAM & PPC DETAILS	1	MRC	AAB
E-2	GROUNDING DETAILS AND NOTES	1	MRC	AAB

APPROVALS

THE FOLLOWING PARTIES HEREBY APPROVE AND ACCEPT THESE DOCUMENTS AND AUTHORIZE THE CONTRACTOR TO PROCEED WITH THE CONSTRUCTION DESCRIBED HEREIN. ALL DOCUMENTS ARE SUBJECT TO REVIEW BY THE LOCAL BUILDING DEPARTMENT AND MAY IMPOSE CHANGES OR MODIFICATIONS.

SPRINT: _____ DATE: _____

CONSTRUCTION MANAGER: _____ DATE: _____

LEASING/ SITE ACQUISITION: _____ DATE: _____

RF ENGINEER: _____ DATE: _____

LANDLORD/ TOWER OWNER: _____ DATE: _____

COMMONWEALTH OF MASSACHUSETTS
MARC R. CHRETIEN
CIVIL
No. 40313
REGISTERED PROFESSIONAL ENGINEER

ENGINEER/LAND SURVEYOR DATE

IT IS A VIOLATION OF LAW FOR ANY PERSON, UNLESS THEY ARE ACTING UNDER THE DIRECTION OF A LICENSED PROFESSIONAL ENGINEER, TO ALTER THIS DOCUMENT.

REVISIONS

REV. #	DATE	DESCRIPTION
1	03/24/14	ISSUED FOR CONSTRUCTION
0	02/07/14	ISSUED FOR REVIEW

PROJECT NO.			SCALE
N/A	DESIGNED BY:	MRC	
	DRAWN BY:	AAB	
	CHECK'D BY:	MRC	

PROJECT INFORMATION
TAGE INN
BS54XC903
844 McGRATH HIGHWAY
SOMERVILLE, MA 02143

DRAWING TITLE
TITLE SHEET

DRAWING NUMBER
T-1

THESE OUTLINE SPECIFICATIONS IN CONJUNCTION WITH THE SPRINT STANDARD CONSTRUCTION SPECIFICATIONS, INCLUDING CONTRACT DOCUMENTS AND THE CONSTRUCTION DRAWINGS DESCRIBE THE WORK TO BE PERFORMED BY THE CONTRACTOR.

SECTION 01 100 – SCOPE OF WORK

PART 1 - GENERAL

1.1 THE WORK: THESE STANDARD CONSTRUCTION SPECIFICATIONS IN CONJUNCTION WITH THE SPRINT CONSTRUCTION STANDARDS FOR WIRELESS SITES, CONTRACT DOCUMENTS AND THE CONSTRUCTION DRAWINGS DESCRIBE THE WORK TO BE PERFORMED BY THE CONTRACTOR.

1.2 RELATED DOCUMENTS:

A. THE REQUIREMENTS OF THIS SECTION APPLY TO ALL SECTIONS IN THIS SPECIFICATION.

B. SPRINT "STANDARD CONSTRUCTION DETAILS FOR WIRELESS SITES" ARE INCLUDED IN AND MADE A PART OF THESE SPECIFICATIONS HEREWITH.

1.3 PRECEDENCE: SHOULD CONFLICTS OCCUR BETWEEN THE STANDARD CONSTRUCTION SPECIFICATIONS FOR WIRELESS SITES INCLUDING THE STANDARD CONSTRUCTION DETAILS FOR WIRELESS SITES AND THE CONSTRUCTION DRAWINGS, INFORMATION ON THE CONSTRUCTION DRAWINGS SHALL TAKE PRECEDENCE. NOTIFY SPRINT CONSTRUCTION MANAGER IF THIS OCCURS.

1.4 NATIONALLY RECOGNIZED CODES AND STANDARDS:

A. THE WORK SHALL COMPLY WITH APPLICABLE NATIONAL AND LOCAL CODES AND STANDARDS, LATEST EDITION, AND PORTIONS THEREOF, INCLUDED BUT NOT LIMITED TO THE FOLLOWING:

1. GR-78-CORE GENERIC REQUIREMENTS FOR THE PHYSICAL DESIGN AND MANUFACTURE OF TELECOMMUNICATIONS EQUIPMENT.
2. GR-1089 CORE, ELECTROMAGNETIC COMPATIBILITY AND ELECTRICAL SAFETY -GENERIC CRITERIA FOR NETWORK TELECOMMUNICATIONS EQUIPMENT.
3. NATIONAL FIRE PROTECTION ASSOCIATION CODES AND STANDARDS (NFPA) INCLUDING NFPA 70 (NATIONAL ELECTRICAL CODE - "NEC") AND NFPA 101 (LIFE SAFETY CODE).
4. AMERICAN SOCIETY FOR TESTING OF MATERIALS (ASTM)
5. INSTITUTE OF ELECTRONIC AND ELECTRICAL ENGINEERS (IEEE)
6. AMERICAN CONCRETE INSTITUTE (ACI)
7. AMERICAN WIRE PRODUCERS ASSOCIATION (AWPA)
8. CONCRETE REINFORCING STEEL INSTITUTE (CRSI)
9. AMERICAN ASSOCIATION OF STATE HIGHWAY AND TRANSPORTATION OFFICIALS (AASHTO)
10. PORTLAND CEMENT ASSOCIATION (PCA)
11. NATIONAL CONCRETE MASONRY ASSOCIATION (NCMA)
12. BRICK INDUSTRY ASSOCIATION (BIA)
13. AMERICAN WELDING SOCIETY (AWS)
14. NATIONAL ROOFING CONTRACTORS ASSOCIATION (NRCA)
15. SHEET METAL AND AIR CONDITIONING CONTRACTORS' NATIONAL ASSOCIATION (SMACNA)
16. DOOR AND HARDWARE INSTITUTE (DHI)
17. OCCUPATIONAL SAFETY AND HEALTH ACT (OSHA)
18. APPLICABLE BUILDING CODES INCLUDING UNIFORM BUILDING CODE, SOUTHERN BUILDING CODE, BOCA, AND THE INTERNATIONAL BUILDING CODE.

1.5 DEFINITIONS:

A. WORK: THE SUM OF TASKS AND RESPONSIBILITIES IDENTIFIED IN THE CONTRACT DOCUMENTS.
B. COMPANY: SPRINT CORPORATION
C. ENGINEER: SYNONYMOUS WITH ARCHITECT & ENGINEER AND "A&E". THE DESIGN PROFESSIONAL HAVING PROFESSIONAL RESPONSIBILITY FOR DESIGN OF THE PROJECT.
D. CONTRACTOR: CONSTRUCTION CONTRACTOR; CONSTRUCTION VENDOR; INDIVIDUAL OR ENTITY WHO AFTER EXECUTION OF A CONTRACT IS BOUND TO ACCOMPLISH THE WORK.
E. THIRD PARTY VENDOR OR AGENCY: A VENDOR OR AGENCY ENGAGED SEPARATELY BY THE COMPANY, A&E, OR CONTRACTOR TO PROVIDE MATERIALS OR TO ACCOMPLISH SPECIFIC TASKS RELATED TO BUT NOT INCLUDED IN THE WORK.
F. OFCI: OWNER FURNISHED, CONTRACTOR INSTALLED EQUIPMENT.
G. CONSTRUCTION MANAGER - ALL PROJECTS RELATED COMMUNICATION TO FLOW THROUGH SPRINT REPRESENTATIVE IN CHARGE OF PROJECT...

1.6 SITE FAMILIARITY: CONTRACTOR SHALL BE RESPONSIBLE FOR FAMILIARIZING HIMSELF WITH ALL CONTRACT DOCUMENTS, FIELD CONDITIONS AND DIMENSIONS PRIOR TO PROCEEDING WITH CONSTRUCTION. ANY DISCREPANCIES SHALL BE BROUGHT TO THE ATTENTION OF THE SPRINT CONSTRUCTION MANAGER PRIOR TO THE COMMENCEMENT OF WORK. NO COMPENSATION WILL BE AWARDED BASED ON CLAIM OF LACK OF KNOWLEDGE OR FIELD CONDITIONS.

1.7 POINT OF CONTACT: COMMUNICATION BETWEEN SPRINT AND THE CONTRACTOR SHALL FLOW THROUGH THE SINGLE SPRINT CONSTRUCTION MANAGER APPOINTED TO MANAGE THE PROJECT FOR SPRINT.

1.8 ON-SITE SUPERVISION: THE CONTRACTOR SHALL SUPERVISE AND DIRECT THE WORK AND SHALL BE RESPONSIBLE FOR CONSTRUCTION MEANS, METHODS, TECHNIQUES, SEQUENCES, AND PROCEDURES IN ACCORDANCE WITH THE CONTRACT DOCUMENTS. THE CONTRACTOR SHALL EMPLOY A COMPETENT SUPERINTENDENT WHO SHALL BE IN ATTENDANCE AT THE SITE AT ALL TIMES DURING PERFORMANCE OF THE WORK.

1.9 DRAWINGS, SPECIFICATIONS AND DETAILS REQUIRED AT JOBSITE: THE CONSTRUCTION CONTRACTOR SHALL MAINTAIN A FULL SET OF THE CONSTRUCTION DRAWINGS, STANDARD CONSTRUCTION DETAILS FOR WIRELESS SITES AND THE STANDARD CONSTRUCTION SPECIFICATIONS FOR WIRELESS SITES AT THE JOBSITE FROM MOBILIZATION THROUGH CONSTRUCTION COMPLETION.

A. THE JOBSITE DRAWINGS, SPECIFICATIONS AND DETAILS SHALL BE CLEARLY MARKED DAILY IN RED PENCIL WITH ANY CHANGES IN CONSTRUCTION OVER WHAT IS DEPICTED IN THE DOCUMENTS. AT CONSTRUCTION COMPLETION, THIS JOBSITE MARKUP SET SHALL BE DELIVERED TO THE COMPANY OR COMPANY'S DESIGNATED REPRESENTATIVE TO BE FORWARDED TO THE COMPANY'S A&E VENDOR FOR PRODUCTION OF "AS–BUILT" DRAWINGS.
B. DETAILS ARE INTENDED TO SHOW DESIGN INTENT. MODIFICATIONS MAY BE REQUIRED TO SUIT JOB DIMENSIONS OR CONDITIONS, AND SUCH MODIFICATIONS SHALL BE INCLUDED AS PART OF THE WORK. CONTRACTOR SHALL NOTIFY SPRINT CONSTRUCTION MANAGER OF ANY VARIATIONS PRIOR TO PROCEEDING WITH THE WORK.
C . DIMENSIONS SHOWN ARE TO FINISH SURFACES UNLESS NOTED OTHERWISE. SPACING BETWEEN EQUIPMENT IS THE REQUIRED CLEARANCE. SHOULD THERE BE ANY QUESTIONS REGARDING THE CONTRACT DOCUMENTS, EXISTING CONDITIONS AND/OR DESIGN INTENT, THE CONTRACTOR SHALL BE RESPONSIBLE FOR OBTAINING A CLARIFICATION FROM THE SPRINT CONSTRUCTION MANAGER PRIOR TO PROCEEDING WITH THE WORK.

1.10 USE OF JOB SITE: THE CONTRACTOR SHALL CONFINE ALL CONSTRUCTION AND RELATED OPERATIONS INCLUDING STAGING AND STORAGE OF MATERIALS AND EQUIPMENT, PARKING, TEMPORARY FACILITIES, AND WASTE STORAGE TO THE LEASE PARCEL UNLESS OTHERWISE PERMITTED BY THE CONTRACT DOCUMENTS.

1.11 UTILITIES SERVICES: WHERE NECESSARY TO CUT EXISTING PIPES, ELECTRICAL WIRES, CONDUITS, CABLES, ETC., OF UTILITY SERVICES, OR OF FIRE PROTECTION OR COMMUNICATIONS SYSTEMS, THEY SHALL BE CUT AND CAPPED AT SUITABLE PLACES OR WHERE SHOWN. ALL SUCH ACTIONS SHALL BE COORDINATED WITH THE UTILITY COMPANY INVOLVED:

1.12 PERMITS / FEES: WHEN REQUIRED THAT A PERMIT OR CONNECTION FEE BE PAID TO A PUBLIC UTILITY PROVIDER FOR NEW SERVICE TO THE CONSTRUCTION PROJECT, PAYMENT OF SUCH FEE SHALL BE THE RESPONSIBILITY OF THE CONTRACTOR.

1.13 CONTRACTOR SHALL TAKE ALL MEASURES AND PROVIDE ALL MATERIAL NECESSARY FOR PROTECTING EXISTING EQUIPMENT AND PROPERTY.

1.14 METHODS OF PROCEDURE (MOPS) FOR CONSTRUCTION: CONTRACTOR SHALL PERFORM WORK AS DESCRIBED IN THE FOLLOWING INSTALLATION AND COMMISSIONING MOPS.

A. TOP HAT
B. HOW TO INSTALL A NEW CABINET
C. BASE BAND UNIT IN EXISTING UNIT
D. INSTALLATION OF BATTERIES
E. INSTALLATION OF HYBRID CABLE
F. INSTALLATION OF RRH'S
G. CABLING
H. TS-0200 REV 4 - ANTENNA LINE ACCEPTANCE STANDARDS
I. SPRINT CELL SITE ENGINEERING NOTICE - EN 2012-001, REV 1.
J. COMMISSIONING MOPS
K. SPRINT CELL SITE ENGINEERING NOTICE - EN-2013-002
L. SPRINT ENGINEERING LETTER - EL-0504
M. SPRINT ENGINEERING LETTER - EL-0568
N. SPRINT TECHNICAL SPECIFICATION - TS-0193

1.15 USE OF ELECTRONIC PROJECT MANAGEMENT SYSTEMS:

A. CONTRACTOR WILL UTILIZE ITS BEST EFFORTS TO WORK WITH SPRINT ELECTRONIC PROJECT MANAGEMENT SYSTEMS. CONTRACTOR UNDERSTANDS THAT SUFFICIENT INTERNET ACCESS, EQUIVALENT TO "BROADBAND" OR BETTER, IS REQUIRED TO TIMELY AND EFFECTIVELY UTILIZE SPRINT DATA AND DOCUMENT MANAGEMENT SYSTEMS AND AGREES TO MAINTAIN APPROPRIATE CONNECTIONS FOR CONTRACTOR'S STAFF AND OFFICES THAT ARE COMPATIBLE WITH SPRINT DATA AND DOCUMENT MANAGEMENT SYSTEMS

PART 2 - PRODUCTS (NOT USED)

PART 3 - EXECUTION

3.1 TEMPORARY UTILITIES AND FACILITIES: THE CONTRACTOR SHALL BE RESPONSIBLE FOR ALL TEMPORARY UTILITIES AND FACILITIES NECESSARY EXCEPT AS OTHERWISE INDICATED IN THE CONSTRUCTION DOCUMENTS. TEMPORARY UTILITIES AND FACILITIES INCLUDE POTABLE WATER, HEAT, HVAC, ELECTRICITY, SANITARY FACILITIES, WASTE DISPOSAL FACILITIES, AND TELEPHONE/COMMUNICATION SERVICES. PROVIDE TEMPORARY UTILITIES AND FACILITIES IN ACCORDANCE WITH OSHA AND THE AUTHORITY HAVING JURISDICTION. CONTRACTOR MAY UTILIZE THE COMPANY ELECTRICAL SERVICE IN THE COMPLETION OF THE WORK WHEN IT BECOMES AVAILABLE. USE OF THE LESSORS OR SITE OWNER'S UTILITIES OR FACILITIES IS EXPRESSLY FORBIDDEN EXCEPT AS OTHERWISE ALLOWED IN THE CONTRACT DOCUMENTS.

3.2 ACCESS TO WORK: THE CONTRACTOR SHALL PROVIDE ACCESS TO THE JOB SITE FOR AUTHORIZED COMPANY PERSONNEL AND AUTHORIZED REPRESENTATIVES OF THE ARCHITECT/ENGINEER DURING ALL PHASES OF THE WORK.

3.3 TESTING: REQUIREMENTS FOR TESTING BY THIS CONTRACTOR SHALL BE AS INDICATED HEREWITH, ON THE CONSTRUCTION DRAWINGS, AND IN THE INDIVIDUAL SECTIONS OF THESE SPECIFICATIONS. SHOULD COMPANY CHOOSE TO ENGAGE ANY THIRD-PARTY TO CONDUCT ADDITIONAL TESTING, THE CONTRACTOR SHALL COOPERATE WITH AND PROVIDE A WORK AREA FOR COMPANY'S TEST AGENCY.

3.4 DIMENSIONS: VERIFY DIMENSIONS INDICATED ON DRAWINGS WITH FIELD DIMENSIONS BEFORE FABRICATION OR ORDERING OF MATERIALS. DO NOT SCALE DRAWINGS.

3.5 EXISTING CONDITIONS: NOTIFY THE SPRINT CONSTRUCTION MANAGER OF EXISTING CONDITIONS DIFFERING FROM THOSE INDICATED ON THE DRAWINGS. DO NOT REMOVE OR ALTER STRUCTURAL COMPONENTS WITHOUT PRIOR WRITTEN APPROVAL FROM THE ARCHITECT AND ENGINEER.

SECTION 01 200 – COMPANY FURNISHED MATERIAL AND EQUIPMENT

PART 1 – GENERAL

1.1 THE WORK: THESE STANDARD CONSTRUCTION SPECIFICATIONS IN CONJUNCTION WITH THE OTHER CONTRACT DOCUMENTS AND THE CONSTRUCTION DRAWINGS DESCRIBE THE WORK TO BE PERFORMED BY THE CONTRACTOR.

1.2 RELATED DOCUMENTS:

A. THE REQUIREMENTS OF THIS SECTION APPLY TO ALL SECTIONS IN THIS SPECIFICATION.

B. SPRINT "STANDARD CONSTRUCTION DETAILS FOR WIRELESS SITES" ARE INCLUDED IN AND MADE A PART OF THESE SPECIFICATIONS HEREWITH.

PART 2 – PRODUCTS (NOT USED)

PART 3 – EXECUTION

3.1 RECEIPT OF MATERIAL AND EQUIPMENT:

A. COMPANY FURNISHED MATERIAL AND EQUIPMENT IS IDENTIFIED ON THE RF DATA SHEET IN THE CONSTRUCTION DOCUMENTS.

B. THE CONTRACTOR IS RESPONSIBLE FOR SPRINT PROVIDED MATERIAL AND EQUIPMENT AND UPON RECEIPT SHALL:

1. ACCEPT DELIVERIES AS SHIPPED AND TAKE RECEIPT.
2. VERIFY COMPLETENESS AND CONDITION OF ALL DELIVERIES.
3. TAKE RESPONSIBILITY FOR EQUIPMENT AND PROVIDE INSURANCE PROTECTION AS REQUIRED IN AGREEMENT.
4. RECORD ANY DEFECTS OR DAMAGES AND WITHIN TWENTY-FOUR HOURS AFTER RECEIPT, REPORT TO SPRINT OR ITS DESIGNATED PROJECT REPRESENTATIVE OF SUCH.
5. PROVIDE SECURE AND NECESSARY WEATHER PROTECTED WAREHOUSING.
6. COORDINATE SAFE AND SECURE TRANSPORTATION OF MATERIAL AND EQUIPMENT, DELIVERING AND OFF-LOADING FROM CONTRACTOR'S WAREHOUSE TO SITE.

3.2 DELIVERABLES:

A. COMPLETE SHIPPING AND RECEIPT DOCUMENTATION IN ACCORDANCE WITH COMPANY PRACTICE.

B. IF APPLICABLE, COMPLETE LOST/STOLEN/DAMAGED DOCUMENTATION REPORT AS NECESSARY IN ACCORDANCE WITH COMPANY PRACTICE, AND AS DIRECTED BY COMPANY.

C. UPLOAD DOCUMENTATION INTO SPRINT SITE MANAGEMENT SYSTEM (SMS) AND/OR PROVIDE HARD COPY DOCUMENTATION AS REQUESTED.

SECTION 01 300 – CELL SITE CONSTRUCTION

PART 1 – GENERAL

1.1 THE WORK: THESE STANDARD CONSTRUCTION SPECIFICATIONS IN CONJUNCTION WITH THE OTHER CONTRACT DOCUMENTS AND THE CONSTRUCTION DRAWINGS DESCRIBE THE WORK TO BE PERFORMED BY THE CONTRACTOR.

1.2 RELATED DOCUMENTS:

A. THE REQUIREMENTS OF THIS SECTION APPLY TO ALL SECTIONS IN THIS SPECIFICATION.

B. SPRINT "STANDARD CONSTRUCTION DETAILS FOR WIRELESS SITES" ARE INCLUDED IN AND MADE A PART OF THESE SPECIFICATIONS HEREWITH.

1.3 NOTICE TO PROCEED:

A. NO WORK SHALL COMMENCE PRIOR TO COMPANY'S WRITTEN NOTICE TO PROCEED AND THE ISSUANCE OF THE WORK ORDER.

B. UPON RECEIVING NOTICE TO PROCEED, CONTRACTOR SHALL FULLY PERFORM ALL WORK NECESSARY TO PROVIDE SPRINT WITH AN OPERATIONAL WIRELESS FACILITY.

PART 2 – PRODUCTS (NOT USED)

PART 3 – EXECUTION

3.1 FUNCTIONAL REQUIREMENTS:

A. THE ACTIVITIES DESCRIBED IN THIS PARAGRAPH REPRESENT MINIMUM ACTIONS AND PROCESSES REQUIRED TO SUCCESSFULLY COMPLETE THE WORK. THE ACTIVITIES DESCRIBED ARE NOT EXHAUSTIVE, AND CONTRACTOR SHALL TAKE ANY AND ALL ACTIONS AS NECESSARY TO SUCCESSFULLY COMPLETE THE CONSTRUCTION OF A FULLY FUNCTIONING WIRELESS FACILITY AT THE SITE IN ACCORDANCE WITH COMPANY PROCESSES.

B. SUBMIT SPECIFIC DOCUMENTATION AS INDICATED HEREIN, AND OBTAIN REQUIRED APPROVALS WHILE THE WORK IS BEING PERFORMED.

C. MANAGE AND CONDUCT ALL FIELD CONSTRUCTION SERVICE RELATED ACTIVITIES

D. PROVIDE CONSTRUCTION ACTIVITIES TO THE EXTENT REQUIRED BY THE CONTRACT DOCUMENTS, INCLUDING BUT NOT LIMITED TO THE FOLLOWING:

1. PERFORM ANY REQUIRED SITE ENVIRONMENTAL MITIGATION.
2. PREPARE GROUND SITES; PROVIDE DE-GRUBBING; AND ROUGH AND FINAL GRADING, AND COMPOUND SURFACE TREATMENTS.
3. MANAGE AND CONDUCT ALL ACTIVITIES FOR INSTALLATION OF UTILITIES INCLUDING ELECTRICAL AND TELCO BACKHAUL.
4. INSTALL UNDERGROUND FACILITIES INCLUDING UNDERGROUND POWER AND COMMUNICATIONS CONDUITS, AND UNDERGROUND GROUNDING SYSTEM.
5. INSTALL ABOVE GROUND GROUNDING SYSTEMS.
6. PROVIDE NEW HVAC INSTALLATIONS AND MODIFICATIONS.
7. INSTALL "H–FRAMES", CABINETS AND SHELTERS AS INDICATED.
8. INSTALL ROADS, ACCESS WAYS, CURBS AND DRAINS AS INDICATED.
9. ACCOMPLISH REQUIRED MODIFICATION OF EXISTING FACILITIES.
10. PROVIDE ANTENNA SUPPORT STRUCTURE FOUNDATIONS.
11. PROVIDE SLABS AND EQUIPMENT PLATFORMS.
12. INSTALL COMPOUND FENCING, SIGHT SHIELDING, LANDSCAPING AND ACCESS BARRIERS.
13. PERFORM INSPECTION AND MATERIAL TESTING AS REQUIRED HEREINAFTER.
14. CONDUCT SITE RESISTANCE TO EARTH TESTING AS REQUIRED HEREINAFTER
15. INSTALL FIXED GENERATOR SETS AND OTHER STANDBY POWER SOLUTIONS.
16. INSTALL TOWERS, ANTENNA SUPPORT STRUCTURES AND PLATFORMS ON EXISTING TOWERS AS REQUIRED.
17. INSTALL CELL SITE RADIOS, MICROWAVE, GPS, COAXIAL MAINLINE, ANTENNAS, CROSS BAND COUPLERS, TOWER TOP AMPLIFIERS, LOW NOISE AMPLIFIERS AND RELATED EQUIPMENT.
18. PERFORM, DOCUMENT, AND CLOSE OUT ANY CONSTRUCTION CONTROL DOCUMENTS THAT MAY BE REQUIRED BY GOVERNMENT AGENCIES AND LANDLORDS.
19. PERFORM ANTENNAL AND COAX SWEEP TESTING AND MAKE ANY AND ALL NECESSARY CORRECTIONS.
20. REMAIN ON SITE MOBILIZED THROUGHOUT HAND–OFF AND INTEGRATION TO ASSIST AS NEEDED UNTIL SITE IS DEEMED SUBSTANTIALLY COMPLETE AND PLACED "ON AIR."

3.2 GENERAL REQUIREMENTS FOR CIVIL CONSTRUCTION:

A. CONTRACTOR SHALL KEEP THE SITE FREE FROM ACCUMULATING WASTE MATERIAL, DEBRIS, AND TRASH. AT THE COMPLETION OF THE WORK, CONTRACTOR SHALL REMOVE FROM THE SITE ALL REMAINING RUBBISH, IMPLEMENTS, TEMPORARY FACILITIES, AND SURPLUS MATERIALS.

B. EQUIPMENT ROOMS SHALL AT ALL TIMES BE MAINTAINED "BROOM CLEAN" AND CLEAR OF DEBRIS.

C. CONTRACTOR SHALL TAKE ALL REASONABLE PRECAUTIONS TO DISCOVER AND LOCATE ANY HAZARDOUS CONDITION.

1. IN THE EVENT CONTRACTOR ENCOUNTERS ANY HAZARDOUS CONDITION WHICH HAS NOT BEEN ABATED OR OTHERWISE MITIGATED, CONTRACTOR AND ALL OTHER PERSONS SHALL IMMEDIATELY STOP WORK IN THE AFFECTED AREA AND NOTIFY COMPANY IN WRITING. THE WORK IN THE AFFECTED AREA SHALL NOT BE RESUMED EXCEPT BY WRITTEN NOTIFICATION BY COMPANY.
2. CONTRACTOR AGREES TO USE CARE WHILE ON THE SITE AND SHALL NOT TAKE ANY ACTION THAT WILL OR MAY RESULT IN OR CAUSE THE HAZARDOUS CONDITION TO BE FURTHER RELEASED IN THE ENVIRONMENT, OR TO FURTHER EXPOSE INDIVIDUALS TO THE HAZARD.

D. CONTRACTOR'S ACTIVITIES SHALL BE RESTRICTED TO THE PROJECT LIMITS. SHOULD AREAS OUTSIDE THE PROJECT LIMITS BE AFFECTED BY CONTRACTOR'S ACTIVITIES, CONTRACTOR SHALL IMMEDIATELY RETURN THEM TO ORIGINAL CONDITION

E. CONDUCT TESTING AS REQUIRED HEREIN.

3.3 DELIVERABLES:

A. CONTRACTOR SHALL REVIEW, APPROVE, AND SUBMIT TO SPRINT SHOP DRAWINGS, PRODUCT DATA, SAMPLES, AND SIMILAR SUBMITTALS AS REQUIRED HEREINAFTER

B. PROVIDE DOCUMENTATION INCLUDING, BUT NOT LIMITED TO, THE FOLLOWING. DOCUMENTATION SHALL BE FORWARDED IN ORIGINAL FORMAT AND/OR UPLOADED INTO SMS.

1. ALL CORRESPONDENCE AND PRELIMINARY CONSTRUCTION REPORTS.
2. PROJECT PROGRESS REPORTS.
3. CIVIL CONSTRUCTION START DATE (POPULATE FIELD IN SMS AND/OR FORWARD NOTIFICATION).
4. ELECTRICAL SERVICE COMPLETION DATE (POPULATE FIELD IN SMS AND/OR FORWARD NOTIFICATION).
5. LINES AND ANTENNA INSTALL DATE (POPULATE FIELD IN SMS AND/OR FORWARD NOTIFICATION).
6. POWER INSTALL DATE (POPULATE FIELD IN SMS AND/OR FORWARD NOTIFICATION).
7. TELCO READY DATE (POPULATE FIELD IN SMS AND/OR FORWARD NOTIFICATION).
8. PPC (OR SHELTER) INSTALL DATE (POPULATE FIELD IN SMS AND/OR FORWARD NOTIFICATION).
9. TOWER CONSTRUCTION START DATE (POPULATE FIELD IN SMS AND/OR FORWARD NOTIFICATION).
10. TOWER CONSTRUCTION COMPLETE DATE (POPULATE FIELD IN SMS AND/OR FORWARD NOTIFICATION).
11. BTS AND RADIO EQUIPMENT DELIVERED AT SITE DATE (POPULATE FIELD IN SMS AND/OR FORWARD NOTIFICATION).
12. NETWORK OPERATIONS HANDOFF CHECKLIST (HOC WALK) COMPLETE (UPLOAD FORM IN SMS)
13. CIVIL CONSTRUCTION COMPLETE DATE (POPULATE FIELD IN SMS AND/OR FORWARD NOTIFICATION).
14. SITE CONSTRUCTION PROGRESS PHOTOS UNLOADED INTO SMS.

CONTINUE SHEET SP–2

Sprint VISION
1 INTERNATIONAL BLVD, SUITE 800
MAHWAH, NJ 07495
(201) 684-4000

J LEE ASSOCIATES, LLC
753 FOREST STREET
MARLBOROUGH, MA 01752-3047
PHONE: (800) 825-6460
www.guardian-energy.com

ADVANCED ENGINEERING GROUP, P.C.
Civil Engineering - Site Development
Surveying - Telecommunications
500 NORTH BROADWAY
EAST PROVIDENCE, RI 02914
PH: 401–354–2403
FAX: 401–633–6354

COMMONWEALTH OF MASSACHUSETTS
MARC R. CHRETIEN
CIVIL
No. 40313
REGISTERED PROFESSIONAL ENGINEER

ENGINEER/LAND SURVEYOR DATE

IT IS A VIOLATION OF LAW FOR ANY PERSON, UNLESS THEY ARE ACTING UNDER THE DIRECTION OF A LICENSED PROFESSIONAL ENGINEER, TO ALTER THIS DOCUMENT.

REVISIONS

REV. #	DATE	DESCRIPTION
1	03/24/14	ISSUED FOR CONSTRUCTION
0	02/07/14	ISSUED FOR REVIEW

PROJECT NO.		SCALE
N/A	DESIGNED BY: MRC DRAWN BY: AAB CHECK'D BY: MRC	

PROJECT INFORMATION

TAGE INN
BS54XC903

844 McGRATH HIGHWAY
SOMERVILLE, MA 02143

DRAWING TITLE

OUTLINE SPECIFICATIONS

DRAWING NUMBER

SP-1

CONTINUED FROM SP-1:

SECTION 01 400 – SUBMITTALS, TESTS, AND INSPECTIONS

PART 1 - GENERAL

1.1 THE WORK: THESE STANDARD CONSTRUCTION SPECIFICATIONS IN CONJUNCTION WITH THE OTHER CONTRACT DOCUMENTS AND THE CONSTRUCTION DRAWINGS DESCRIBE THE WORK TO BE PERFORMED BY THE CONTRACTOR.

1.2 RELATED DOCUMENTS:

A. THE REQUIREMENTS OF THIS SECTION APPLY TO ALL SECTIONS IN THIS SPECIFICATION.

B. SPRINT "STANDARD CONSTRUCTION DETAILS FOR WIRELESS SITES" ARE INCLUDED IN AND MADE A PART OF THESE SPECIFICATIONS HEREWITH.

1.3 SUBMITTALS:

A. THE WORK IN ALL ASPECTS SHALL COMPLY WITH THE CONSTRUCTION DRAWINGS AND THESE SPECIFICATIONS.

B. SUBMIT THE FOLLOWING TO COMPANY REPRESENTATIVE FOR APPROVAL.
1. CONCRETE MIX-DESIGNS FOR TOWER FOUNDATIONS, ANCHORS PIERS, AND CONCRETE PAVING.
2. CONCRETE BREAK TESTS AS SPECIFIED HEREIN.
3. SPECIAL FINISHES FOR INTERIOR SPACES, IF ANY.
4. ALL EQUIPMENT AND MATERIALS SO IDENTIFIED ON THE CONSTRUCTION DRAWINGS.
5. CHEMICAL GROUNDING DESIGN.

C. ALTERNATES: AT THE COMPANY'S REQUEST, ANY ALTERNATIVES TO THE MATERIALS OR METHODS SPECIFIED SHALL BE SUBMITTED TO SPRINT'S CONSTRUCTION MANAGER FOR APPROVAL PRIOR TO BEING SHIPPED TO SITE. SPRINT WILL REVIEW AND APPROVE ONLY THOSE REQUESTS MADE IN WRITING. NO VERBAL APPROVALS WILL BE CONSIDERED. SUBMITTAL FOR APPROVAL SHALL INCLUDE A STATEMENT OF COST REDUCTION PROPOSED FOR USE OF ALTERNATE PRODUCT.

1.4 TESTS AND INSPECTIONS:

A. THE CONTRACTOR SHALL BE RESPONSIBLE FOR ALL CONSTRUCTION TESTS, INSPECTIONS AND PROJECT DOCUMENTATION.

B. CONTRACTOR SHALL ACCOMPLISH TESTING INCLUDING BUT NOT LIMITED TO THE FOLLOWING:

1. COAX SWEEPS AND FIBER TESTS PER SPRINT TS-0200 CURRENT VERSION ANTENNA LINE ACCEPTANCE STANDARDS.
2. AGL, AZIMUTH AND DOWNTILT USING ELECTRONIC COMMERCIAL MADE-FOR-THE-PURPOSE ANTENNA ALIGNMENT TOOL.
3. CONTRACTOR SHALL BE RESPONSIBLE FOR ANY AND ALL CORRECTIONS TO ANY WORK IDENTIFIED AS UNACCEPTABLE IN SITE INSPECTION ACTIVITIES AND/OR AS A RESULT OF TESTING.

C. REQUIRED CLOSEOUT DOCUMENTATION INCLUDES, BUT IS NOT LIMITED TO THE FOLLOWING;

1. AZIMUTH, DOWNTILT, AGL - UPLOAD REPORT FROM ANTENNA ALIGNMENT TOOL TO SITERRA TASK 465. INSTALLED AZIMUTH, DOWNTILT, AND AGL MUST CONFORM TO THE RF DATA SHEETS. SWEEP AND FIBER TESTS
2. SCANABLE BARCODE PHOTOGRAPHS OF TOWER TOP AND INACCESSIBLE SERIALIZED EQUIPMENT
3. ALL AVAILABLE JURISDICTIONAL INFORMATION
4. PDF SCAN OF REDLINES PRODUCED IN FIELD
5. ELECTRONIC AS-BUILT DRAWINGS IN AUTOCAD AND PDF FORMATS. ANY FIELD CHANGE MUST BE REFLECTED BY MODIFYING THE PLANS, ELEVATIONS, AND DETAILS IN THE DRAWING SETS. GENERAL NOTES INDICATING MODIFICATIONS WILL NOT BE ACCEPTED. CHANGES SHALL BE HIGHLIGHTED AS "CLOUDS" IDENTIFIED AS THE "AS-BUILT" CONDITION.
6. LIEN WAIVERS
7. FINAL PAYMENT APPLICATION
8. REQUIRED FINAL CONSTRUCTION PHOTOS
9. CONSTRUCTION AND COMMISSIONING CHECKLIST COMPLETE WITH NO DEFICIENT ITEMS
10. ALL POST NTP TASKS INCLUDING DOCUMENT UPLOADS COMPLETED IN SITERRA (SPRINTS DOCUMENT REPOSITORY OF RECORD).

1.5 COMMISSIONING: PERFORM ALL COMMISSIONING AS REQUIRED BY APPLICABLE MOPS

1.6 INTEGRATION: PERFORM ALL INTEGRATION ACTIVITIES AS REQUIRED BY APPLICABLE MOPS

PART 2 - PRODUCTS (NOT USED)

PART 3 - EXECUTION

3.1 REQUIREMENTS FOR TESTING:

A. THIRD PARTY TESTING AGENCY: WHEN THE USE OF A THIRD PARTY INDEPENDENT TESTING AGENCY IS REQUIRED, THE AGENCY THAT IS SELECTED MUST PERFORM SUCH WORK ON A REGULAR BASIS IN THE STATE WHERE THE PROJECT IS LOCATED AND HAVE A THOROUGH UNDERSTANDING OF LOCAL AVAILABLE MATERIALS, INCLUDING THE SOIL, ROCK, AND GROUNDWATER CONDITIONS.

1. THE THIRD PARTY TESTING AGENCY IS TO BE FAMILIAR WITH THE APPLICABLE REQUIREMENTS FOR THE TESTS TO BE DONE, EQUIPMENT TO BE USED, AND ASSOCIATED HEALTH AND SAFETY ISSUES.
2. EXPERIENCE IN SOILS, CONCRETE, MASONRY, AGGREGATE, AND ASPHALT TESTING USING ASTM, AASJTO, AND OTHER METHODS IS NEEDED.
3. EXPERIENCE IN SOILS, CONCRETE, MASONRY, AGGREGATE, AND ASPHALT TESTING USING ASTM, AASJTO, AND OTHER METHODS IS NEEDED.

3.2 REQUIRED TESTS:

A. CONTRACTOR SHALL ACCOMPLISH TESTING INCLUDING BUT NOT LIMITED TO THE FOLLOWING:

1. CONCRETE CYLINDER BREAK TESTS FOR THE TOWER AND ANCHOR FOUNDATIONS AS SPECIFIED IN SECTION: PORTLAND CEMENT CONCRETE PAVING.
2. ASPHALT ROADWAY COMPACTED THICKNESS, SURFACE SMOOTHNESS, AND COMPACTED DENSITY TESTING AS SPECIFIED IN SECTION: HOT MIX ASPHALT PAVING.
3. FIELD QUALITY CONTROL TESTING AS SPECIFIED IN SECTION: PORTLAND CEMENT CONCRETE PAVING.
4. TESTING REQUIRED UNDER SECTION: AGGREGATE BASE FOR ACCESS ROADS, PADS AND ANCHOR LOCATIONS
5. STRUCTURAL BACKFILL COMPACTION TESTS FOR THE TOWER FOUNDATION.
6. SITE RESISTANCE TO EARTH TESTING PER EXHIBIT: CELL SITE GROUNDING SYSTEM DESIGN.
7. ANTENNA AND COAX SWEEP TESTS PER EXHIBIT: ANTENNA TRANSMISSION LINE ACCEPTANCE STANDARDS.
8. GROUNDING AT ANTENNA MASTS FOR GPS AND ANTENNAS
9. ALL OTHER TESTS REQUIRED BY COMPANY OR JURISDICTION.

3.3 REQUIRED INSPECTIONS:

A. SCHEDULE INSPECTIONS WITH COMPANY REPRESENTATIVE.

B. CONDUCT INSPECTIONS INCLUDING BUT NOT LIMITED TO THE FOLLOWING:
1. GROUNDING SYSTEM INSTALLATION PRIOR TO EARTH CONCEALMENT DOCUMENTED WITH DIGITAL PHOTOGRAPHS BY CONTRACTOR, APPROVED BY A&E OR SPRINT REPRESENTATIVE.
2. FORMING FOR CONCRETE AND REBAR PLACEMENT PRIOR TO POUR DOCUMENTED WITH DIGITAL PHOTOGRAPHS BY CONTRACTOR, APPROVED BY A&E OR SPRINT REPRESENTATIVE.
3. COMPACTION OF BACKFILL MATERIALS; AGGREGATE BASE FOR ROADS, PADS, AND ANCHORS; ASPHALT PAVING; AND SHAFT BACKFILL FOR CONCRETE AND WOOD POLES, BY INDEPENDENT THIRD PARTY AGENCY.
4. PRE- AND POST-CONSTRUCTION ROOFTOP AND STRUCTURAL INSPECTIONS ON EXISTING FACILITIES.
5. TOWER ERECTION SECTION STACKING AND PLATFORM ATTACHMENT DOCUMENTED BY DIGITAL PHOTOGRAPHS BY THIRD PARTY AGENCY.
6. ANTENNA AZIMUTH , DOWN TILT AND PER SUNLIGHT TOOL SUNSIGHT INSTRUMENTS - ANTENNALIGN ALIGNMENT TOOL (AAT)
7. VERIFICATION DOCUMENTED WITH THE ANTENNA CHECKLIST REPORT, BY A&E, SITE DEVELOPMENT REP, OR RF REP.
8. FINAL INSPECTION CHECKLIST AND HANDOFF WALK (HOC.). SIGNED FORM SHOWING ACCEPTANCE BY FIELD OPS IS TO BE UPLOADED INTO SMS.
9. COAX SWEEP AND FIBER TESTING DOCUMENTS SUBMITTED VIA SMS FOR RF APPROVAL.
10. SCAN-ABLE BARCODE PHOTOGRAPHS OF TOWER TOP AND INACCESSIBLE SERIALIZED EQUIPMENT
11. ALL AVAILABLE JURISDICTIONAL INFORMATION
12. PDF SCAN OF REDLINES PRODUCED IN FIELD

E. THE CONTRACTOR SHALL BE RESPONSIBLE FOR ANY AND ALL CORRECTIONS TO ANY WORK IDENTIFIED AS UNACCEPTABLE IN SITE INSPECTION ACTIVITIES AND/OR AS A RESULT OF TESTING.

F. CONSTRUCTION INSPECTIONS AND CORRECTIVE MEASURES SHALL BE DOCUMENTED BY THE CONTRACTOR WITH WRITTEN REPORTS AND PHOTOGRAPHS. PHOTOGRAPHS MUST BE DIGITAL AND OF SUFFICIENT QUALITY TO CLEARLY SHOW THE SITE CONSTRUCTION. PHOTOGRAPHS MUST CLEARLY IDENTIFY THE PHOTOGRAPHED ITEM AND BE LABELED WITH THE SITE CASCADE NUMBER, SITE NAME, DESCRIPTION, AND DATE.

3.4 DELIVERABLES: TEST AND INSPECTION REPORTS AND CLOSEOUT DOCUMENTATION SHALL BE UPLOADED TO THE SMS AND/OR FORWARDED TO SPRINT FOR INCLUSION INTO THE PERMANENT SITE FILES.

A. THE FOLLOWING TEST AND INSPECTION REPORTS SHALL BE PROVIDED AS APPLICABLE.

1. CONCRETE MIX AND CYLINDER BREAK REPORTS.
2. STRUCTURAL BACKFILL COMPACTION REPORTS.
3. SITE RESISTANCE TO EARTH TEST.
4. ANTENNA AZIMUTH AND DOWN TILT VERIFICATION
5. TOWER ERECTION INSPECTIONS AND MEASUREMENTS DOCUMENTING TOWER INSTALLED PER SUPPLIER'S REQUIREMENTS AND THE APPLICABLE SECTIONS HEREIN.
6. COAX CABLE SWEEP TESTS PER COMPANY'S "ANTENNA LINE ACCEPTANCE STANDARDS".

B. REQUIRED CLOSEOUT DOCUMENTATION INCLUDES THE FOLLOWING;

1. TEST WELLS AND TRENCHES: PHOTOGRAPHS OF ALL TEST WELLS; PHOTOGRAPHS SHOWING ALL OPEN EXCAVATIONS AND TRENCHING PRIOR TO BACKFILLING SHOWING A TAPE MEASURE VISIBLE IN THE EXCAVATIONS INDICATING DEPTH.
2. CONDUITS, CONDUCTORS AND GROUNDING: PHOTOGRAPHS SHOWING TYPICAL INSTALLATION OF CONDUCTORS AND CONNECTORS; PHOTOGRAPHS SHOWING TYPICAL BEND RADIUS OF INSTALLED GROUND WIRES AND GROUND ROD SPACING;
3. CONCRETE FORMS AND REINFORCING: CONCRETE FORMING AT TOWER AND EQUIPMENT/SHELTER PAD/FOUNDATIONS - PHOTOGRAPHS SHOWING ALL REINFORCING STEEL, UTILITY AND CONDUIT STUB OUTS; PHOTOGRAPHS SHOWING CONCRETE POUR OF SHELTER SLAB/FOUNDATION, TOWER FOUNDATION AND GUY ANCHORS WITH VIBRATOR IN USE; PHOTOGRAPHS SHOWING EACH ANCHOR ON GUYED TOWERS, BEFORE CONCRETE POUR.
4. TOWER, ANTENNAS AND MAINLINE: INSPECTION AND PHOTOGRAPHS OF SECTION STACKING; INSPECTION AND PHOTOGRAPHS OF PLATFORM COMPONENT ATTACHMENT POINTS; PHOTOGRAPHS OF TOWER TOP GROUNDING; PHOTOS OF TOWER COAX LINE COLOR CODING AT THE TOP AND AT GROUND LEVEL; INSPECTION AND PHOTOGRAPHS OF OPERATIONAL OF TOWER LIGHTING, AND PLACEMENT OF FAA REGISTRATION SIGN; PHOTOGRAPHS SHOWING ADDITIONAL GROUNDING POINTS FOR TOWERS GREATER THAN 200 FEET.; PHOTOS OF ANTENNA GROUND BAR, EQUIPMENT GROUND BAR, AND MASTER GROUND BAR; PHOTOS OF GPS ANTENNA(S); PHOTOS OF EACH SECTOR OF ANTENNAS; ONE PHOTOGRAPH LOOKING AT THE SECTOR AND ONE FROM BEHIND SHOWING THE PROJECTED COVERAGE AREA; PHOTOS OF COAX WEATHERPROOFING - TOP AND BOTTOM; PHOTOS OF COAX GROUNDING--TOP AND BOTTOM; PHOTOS OF ANTENNA AND MAST GROUNDING; PHOTOS OF COAX CABLE ENTRY INTO SHELTER; PHOTOS OF PLATFORM MECHANICAL CONNECTIONS TO TOWER/MONOPOLE.
5. ROOF TOPS: PRE-CONSTRUCTION AND POST-CONSTRUCTION VISUAL INSPECTION AND PHOTOGRAPHS OF THE ROOF AND INTERIOR TO DETERMINE AND DOCUMENT CONDITIONS; ROOF TOP CONSTRUCTION INSPECTIONS AS REQUIRED BY THE JURISDICTION; PHOTOGRAPHS OF CABLE TRAY AND/OR ICE BRIDGE; PHOTOGRAPHS OF DOGHOUSE/CABLE EXIT FROM ROOF;
6. SITE LAYOUT - PHOTOGRAPHS OF THE OVERALL COMPOUND, INCLUDING EQUIPMENT PLATFORM FROM ALL FOUR CORNERS.
7. FINISHED UTILITIES: CLOSE-UP PHOTOGRAPHS OF THE PPC BREAKER PANEL; CLOSE-UP PHOTOGRAPH OF THE INSIDE OF THE TELCO PANEL AND NIU; CLOSE-UP PHOTOGRAPH OF THE POWER METER AND DISCONNECT; PHOTOS OF POWER AND TELCO ENTRANCE TO COMPANY ENCLOSURE; PHOTOGRAPHS AT METER BOX AND/OR FACILITY DISTRIBUTION PANEL.
8. REQUIRED MATERIALS CERTIFICATIONS: CONCRETE MIX DESIGNS; MILL CERTIFICATION FOR ALL REINFORCING AND STRUCTURAL STEEL; AND ASPHALT PAVING MIX DESIGN.
9. ANY AND ALL SUBMITTALS BY THE JURISDICTION OR COMPANY.

SECTION 01 500 – PROJECT REPORTING

PART 1 - GENERAL

1.1 THE WORK: THESE STANDARD CONSTRUCTION SPECIFICATIONS IN CONJUNCTION WITH THE OTHER CONTRACT DOCUMENTS AND THE CONSTRUCTION DRAWINGS DESCRIBE THE WORK TO BE PERFORMED BY THE CONTRACTOR.

1.2 RELATED DOCUMENTS:

A. THE REQUIREMENTS OF THIS SECTION APPLY TO ALL SECTIONS IN THIS SPECIFICATION.

B. SPRINT "STANDARD CONSTRUCTION DETAILS FOR WIRELESS SITES" ARE INCLUDED IN AND MADE A PART OF THESE SPECIFICATIONS HEREWITH.

PART 2 - PRODUCTS (NOT USED)

PART 3 - EXECUTION

3.1 WEEKLY REPORTS:

A. CONTRACTOR SHALL PROVIDE SPRINT WITH WEEKLY REPORTS SHOWING PROJECT STATUS. THIS STATUS REPORT FORMAT WILL BE PROVIDED TO THE CONTRACTOR BY SPRINT. THE REPORT WILL CONTAIN SITE ID NUMBER, THE MILESTONES FOR EACH SITE, INCLUDING THE BASELINE DATE, ESTIMATED COMPLETION DATE AND ACTUAL COMPLETION DATE.

B. REPORT INFORMATION WILL BE TRANSMITTED TO SPRINT VIA ELECTRONIC MEANS AS REQUIRED. THIS INFORMATION WILL PROVIDE A BASIS FOR PROGRESS MONITORING AND PAYMENT.

3.2 PROJECT CONFERENCE CALLS:

A. SPRINT MAY HOLD WEEKLY PROJECT CONFERENCE CALLS. CONTRACTOR WILL BE REQUIRED TO COMMUNICATE SITE STATUS, MILESTONE COMPLETIONS AND UPCOMING MILESTONE PROJECTIONS, AND ANSWER ANY OTHER SITE STATUS QUESTIONS AS NECESSARY.

3.3 PROJECT TRACKING IN SMS:

A. CONTRACTOR SHALL PROVIDE SCHEDULE UPDATES AND PROJECTIONS IN THE SMS SYSTEM ON A WEEKLY BASIS.

3.4 ADDITIONAL REPORTING:

A. ADDITIONAL OR ALTERNATE REPORTING REQUIREMENTS MAY BE ADDED TO THE REPORT AS DETERMINED TO BE REASONABLY NECESSARY BY COMPANY.

3.5 PROJECT PHOTOGRAPHS:

A. FILE DIGITAL PHOTOGRAPHS OF COMPLETED SITE IN JPEG FORMAT IN THE SMS PHOTO LIBRARY FOR THE RESPECTIVE SITE. PHOTOGRAPHS SHALL BE CLEARLY LABELED WITH SITE NUMBER, NAME AND DESCRIPTION, AND SHALL INCLUDE AT A MINIMUM THE FOLLOWING AS APPLICABLE:

1. SHELTER AND TOWER OVERVIEW.
2. TOWER FOUNDATION(S) - FORMS AND STEEL BEFORE POUR (EACH ANCHOR ON GUYED TOWERS).
3. TOWER FOUNDATION(S) POUR WITH VIBRATOR IN USE (EACH ANCHOR ON GUYED TOWERS).
4. TOWER STEEL AS BEING INSTALLED INTO HOLE (SHOW ANCHOR STEEL ON GUYED TOWERS).
5. PHOTOS OF TOWER SECTION STACKING.
6. CONCRETE TESTING / SAMPLES.
7. PLACING OF ANCHOR BOLTS IN TOWER FOUNDATION.
8. BUILDING/WATER TANK FROM ROAD FOR TENANT IMPROVEMENTS OR COMMENTS.
9. SHELTER FOUNDATION--FORMS AND STEEL BEFORE POURING.
10. SHELTER FOUNDATION POUR WITH VIBRATOR IN USE.
11. COAX CABLE ENTRY INTO SHELTER.
12. PLATFORM MECHANICAL CONNECTIONS TO TOWER/MONOPOLE.
13. ROOFTOP PRE AND POST CONSTRUCTION PHOTOS TO INCLUDE PENETRATIONS AND INTERIOR CEILING.
14. PHOTOS OF TOWER TOP COAX LINE COLOR CODING AND COLOR CODING AT GROUND LEVEL.
15. PHOTOS OF ALL APPROPRIATE COMPANY OR REGULATORY SIGNAGE.
16. PHOTOS OF EQUIPMENT BOLT DOWN INSIDE SHELTER.
17. POWER AND TELCO ENTRANCE TO COMPANY ENCLOSURE AND POWER AND TELCO SUPPLY LOCATIONS INCLUDING METER/DISCONNECT.
18. ELECTRICAL TRENCH(S) WITH ELECTRICAL / CONDUIT BEFORE BACKFILL.
19. ELECTRICAL TRENCH(S) WITH FOIL-BACKED TAPE BEFORE FURTHER BACKFILL.
20. TELCO TRENCH WITH TELEPHONE / CONDUIT BEFORE BACKFILL.
21. TELCO TRENCH WITH FOIL-BACKED TAPE BEFORE FURTHER BACKFILL.
22. SHELTER GROUND-RING TRENCH WITH GROUND-WIRE BEFORE BACKFILL (SHOW ALL CAD WELDS AND BEND RADII).
23. TOWER GROUND-RING TRENCH WITH GROUND-WIRE BEFORE BACKFILL (SHOW ALL CAD WELDS AND BEND RADII).
24. FENCE GROUND-RING TRENCH WITH GROUND-WIRE BEFORE BACKFILL (SHOW ALL CAD WELDS AND BEND RADII).
25. ALL BTS GROUND CONNECTIONS.
26. ALL GROUND TEST WELLS.
27. ANTENNA GROUND BAR AND EQUIPMENT GROUND BAR.
28. ADDITIONAL GROUNDING POINTS ON TOWERS ABOVE 200'.
29. HVAC UNITS INCLUDING CONDENSERS ON SPLIT SYSTEMS.
30. GPS ANTENNAS.
31. CABLE TRAY AND/OR WAVEGUIDE BRIDGE.
32. DOGHOUSE/CABLE EXIT FROM ROOF.
33. EACH SECTOR OF ANTENNAS; ONE PHOTOGRAPH LOOKING AT THE SECTOR AND ONE FROM BEHIND SHOWING THE PROJECTED COVERAGE AREA.
34. MASTER BUS BAR.
35. TELCO BOARD AND NIU.
36. ELECTRICAL DISTRIBUTION WALL.
37. CABLE ENTRY WITH SURGE SUPPRESSION.
38. ENTRANCE TO EQUIPMENT ROOM.
39. COAX WEATHERPROOFING-TOP AND BOTTOM OF TOWER.
40. COAX GROUNDING -TOP AND BOTTOM OF TOWER.
41. ANTENNA AND MAST GROUNDING.
42. LANDSCAPING - WHERE APPLICABLE.

3.6 FINAL PROJECT ACCEPTANCE: COMPLETE ALL REQUIRED REPORTING TASKS PER CONTRACT, CONTRACT DOCUMENTS OR THE SPRINT INTEGRATED CONSTRUCTION STANDARDS FOR WIRELESS SITES AND UPLOAD INTO SITERRA.

SECTION 07 500 – ROOF CUTTING, PATCHING AND REPAIR

SUMMARY:
THIS SECTION SPECIFIES CUTTING AND PATCHING EXISTING ROOFING SYSTEMS WHERE CONDUIT OR CABLES EXIT THE BUILDING ONTO THE ROOF OR BUILDING-MOUNTED ANTENNAS, AND AS REQUIRED FOR WATERTIGHT PERFORMANCE. ROOFTOP ENTRY OPENINGS IN MEMBRANE ROOFTOPS SHALL BE CONSTRUCTED TO COMPLY WITH LANDLORD, ANY EXISTING WARRANTY, AND LOCAL JURISDICTIONAL STANDARDS.

1.4 SUBMITTALS:

A. PRE-CONSTRUCTION ROOF PHOTOS: COMPLETE A ROOF INSPECTION PRIOR TO THE INSTALLATION OF SPRINT EQUIPMENT ON ANY ROOFTOP BUILD. AT A MINIMUM INSPECT AND PHOTOGRAPH (MINIMUM 3 EA.) ALL AREAS IMPACTED BY THE ADDITION OF THE SPRINT EQUIPMENT.

B. PROVIDE SIMILAR PHOTOGRAPHS SHOWING ROOF CONDITIONS AFTER CONSTRUCTION (MINIMUM 3 EA.)

C. ROOF INSPECTION PHOTOGRAPHS SHOULD BE UPLOADED WITH CLOSEOUT PHOTOGRAPHS.

SECTION 09 900 – PAINTING

QUALITY ASSURANCE:

A. COMPLY WITH GOVERNING CODES AND REGULATIONS. PROVIDE PRODUCTS OF ACCEPTABLE MANUFACTURERS WHICH HAVE BEEN IN SATISFACTORY USE IN SIMILAR SERVICE FOR THREE YEARS. USE EXPERIENCED INSTALLERS. DELIVER, HANDLE, AND STORE MATERIALS IN ACCORDANCE WITH MANUFACTURER'S INSTRUCTIONS.

B. COMPLY WITH ALL ENVIRONMENTAL REGULATIONS FOR VOLATILE ORGANIC COMPOUNDS.

CONTINUE SHEET SP-3

Sprint VISION
1 INTERNATIONAL BLVD, SUITE 800
MAHWAH, NJ 07495
(201) 684-4000

J LEE ASSOCIATES, LLC
753 FOREST STREET
MARLBOROUGH, MA 01752-3047
PHONE: (800) 825-6460
www.guardian-energy.com

ADVANCED ENGINEERING GROUP, P.C.
Civil Engineering - Site Development
Surveying - Telecommunications
500 NORTH BROADWAY
EAST PROVIDENCE, RI 02914
PH: 401-354-2403
FAX: 401-633-6354

COMMONWEALTH OF MASSACHUSETTS
MARC R. CHRETIEN
CIVIL
No. 40313
REGISTERED PROFESSIONAL ENGINEER

ENGINEER/LAND SURVEYOR DATE

IT IS A VIOLATION OF LAW FOR ANY PERSON, UNLESS THEY ARE ACTING UNDER THE DIRECTION OF A LICENSED PROFESSIONAL ENGINEER, TO ALTER THIS DOCUMENT.

REVISIONS

REV. #	DATE	DESCRIPTION
1	03/24/14	ISSUED FOR CONSTRUCTION
0	02/07/14	ISSUED FOR REVIEW

PROJECT NO.		SCALE
N/A	DESIGNED BY: MRC	
	DRAWN BY: AAB	
	CHECK'D BY: MRC	

PROJECT INFORMATION

TAGE INN
BS54XC903

844 McGRATH HIGHWAY
SOMERVILLE, MA 02143

DRAWING TITLE

OUTLINE SPECIFICATIONS

DRAWING NUMBER

SP-2

CONTINUED FROM SP-2:

MATERIALS:

A. MANUFACTURERS: BENJAMIN MOORE, ICI DEVOE COATINGS, PPG, SHERWIN WILLIAMS OR APPROVED EQUAL. PROVIDE PREMIUM GRADE, PROFESSIONAL-QUALITY PRODUCTS FOR COATING SYSTEMS.

PAINT SCHEDULE:

A. EXTERIOR ANTENNAE AND ANTENNA MOUNTING HARDWARE: ONE COAT OF PRIMER AND TWO FINISH COATS. PAINT FOR ANTENNAE SHALL BE NON-METALLIC BASED AND CONTAIN NO METALLIC PARTICLES. PROVIDE COLORS AND PATTERNS AS REQUIRED TO MASK APPEARANCE OF ANTENNAE ON ADJACENT BUILDING SURFACES AND AS ACCEPTABLE TO THE OWNER. REFER TO ANTENNA MANUFACTURER'S INSTRUCTIONS WHENEVER POSSIBLE.

B. ROOF TOP CONSTRUCTION: TOUCH UP - PREPARE SURFACES TO BE REPAIRED. FOLLOW INDUSTRY STANDARDS AND REQUIREMENTS OF OWNER TO MATCH EXISTING COATING AND FINISH.

PAINTING APPLICATION:

1. INSPECT SURFACES, REPORT UNSATISFACTORY CONDITIONS IN WRITING; BEGINNING WORK MEANS ACCEPTANCE OF SUBSTRATE.
2. COMPLY WITH MANUFACTURER'S INSTRUCTIONS AND RECOMMENDATIONS FOR PREPARATION, PRIMING AND COATING WORK. COORDINATE WITH WORK OF OTHER SECTIONS.
3. MATCH APPROVED MOCK-UPS FOR COLOR, TEXTURE, AND PATTERN. RE-COAT OR REMOVE AND REPLACE WORK WHICH DOES NOT MATCH OR SHOWS LOSS OF ADHESION.
4. CLEAN UP, TOUCH UP AND PROTECT WORK.

TOUCHUP PAINTING:

1. GALVANIZING DAMAGE AND ALL BOLTS AND NUTS SHALL BE TOUCHED UP AFTER TOWER ERECTION WITH "GALVANOX," "DRY GALV," OR "ZINC-IT."
2. FIELD TOUCHUP PAINT SHALL BE DONE IN ACCORDANCE WITH THE MANUFACTURER'S WRITTEN INSTRUCTIONS.
3. ALL METAL COMPONENTS SHALL BE HANDLED WITH CARE TO PREVENT DAMAGE TO THE COMPONENTS, THEIR PRESERVATIVE TREATMENT, OR THEIR PROTECTIVE COATINGS.

SECTION 11 700 – ANTENNA ASSEMBLY, REMOTE RADIO HEADS AND CABLE INSTALLATION

SUMMARY:
THIS SECTION SPECIFIES INSTALLATION OF ANTENNAS, RRH'S, AND CABLE EQUIPMENT, INSTALLATION, AND TESTING OF COAXIAL FIBER CABLE.

ANTENNAS AND RRH'S:
THE NUMBER AND TYPE OF ANTENNAS AND RRH'S TO BE INSTALLED IS DETAILED ON THE CONSTRUCTION DRAWINGS.

HYBRID CABLE:
HYBRID CABLE WILL BE DC/FIBER AND FURNISHED FOR INSTALLATION AT EACH SITE. CABLE SHALL BE INSTALLED PER THE CONSTRUCTION DRAWINGS AND THE APPLICABLE MANUFACTURER'S REQUIREMENTS.

JUMPERS AND CONNECTORS:
FURNISH AND INSTALL 1/2" COAX JUMPER CABLES BETWEEN THE RRH'S AND ANTENNAS. JUMPERS SHALL BE TYPE LDF 4, FLC 12-50, CR 540, OR FXL 540. SUPER-FLEX CABLES ARE NOT ACCEPTABLE. JUMPERS BETWEEN THE RRH'S AND ANTENNAS OR TOWER TOP AMPLIFIERS SHALL CONSIST OF 1/2 INCH FOAM DIELECTRIC, OUTDOOR RATED COAXIAL CABLE. DO NOT USE SUPERFLEX OUTDOORS. JUMPERS SHALL BE FACTORY FABRICATED IN APPROPRIATE LENGTHS WITH A MAXIMUM OF 4 FEET EXCESS PER JUMPER AND HAVE CONNECTORS AT EACH END, MANUFACTURED BY SUPPLIER. IF JUMPERS ARE FIELD FABRICATED, FOLLOW MANUFACTURER'S REQUIREMENTS FOR INSTALLATION OF CONNECTORS

REMOTE ELECTRICAL TILT (RET) CABLES:

MISCELLANEOUS:
INSTALL SPLITTERS, COMBINERS, FILTERS PER RF DATA SHEET, FURNISHED BY SPRINT.

ANTENNA INSTALLATION:
THE CONTRACTOR SHALL ASSEMBLE ALL ANTENNAS ONSITE IN ACCORDANCE WITH THE INSTRUCTIONS SUPPLIED BY THE MANUFACTURER. ANTENNA HEIGHT, AZIMUTH, AND FEED ORIENTATION INFORMATION SHALL BE A DESIGNATED ON THE CONSTRUCTION DRAWINGS.

A. THE CONTRACTOR SHALL POSITION THE ANTENNA ON TOWER PIPE MOUNTS SO THAT THE BOTTOM STRUT IS LEVEL. THE PIPE MOUNTS SHALL BE PLUMB TO WITHIN 1 DEGREE.

B. ANTENNA MOUNTING REQUIREMENTS: PROVIDE ANTENNA MOUNTING HARDWARE AS INDICATED ON THE DRAWINGS.

HYBRID CABLES INSTALLATION:

A. THE CONTRACTOR SHALL ROUTE, TEST, AND INSTALL ALL CABLES AS INDICATED ON THE CONSTRUCTION DRAWINGS AND IN ACCORDANCE WITH THE MANUFACTURER'S RECOMMENDATIONS.

B. THE INSTALLED RADIUS OF THE CABLES SHALL NOT BE LESS THAN THE MANUFACTURER'S SPECIFICATIONS FOR BENDING RADII.

C. EXTREME CARE SHALL BE TAKEN TO AVOID DAMAGE TO THE CABLES DURING HANDLING AND INSTALLATION.

1. FASTENING MAIN HYBRID CABLES: ALL CABLES SHALL BE PERMANENTLY FASTENED TO THE COAX LADDER AT 4'-0" OC USING NON-MAGNETIC STAINLESS STEEL CLIPS.
2. FASTENING INDIVIDUAL FIBER AND DC CABLES ABOVE BREAKOUT ENCLOSURE (MEDUSA), WITHIN THE MMBTS CABINET AND ANY INTERMEDIATE DISTRIBUTION BOXES:
   a. FIBER: SUPPORT FIBER BUNDLES USING ½" VELCRO STRAPS OF THE REQUIRED LENGTH @ 18" OC. STRAPS SHALL BE UV, OIL AND WATER RESISTANT AND SUITABLE FOR INDUSTRIAL INSTALLATIONS AS MANUFACTURED BY TEXTOL OR APPROVED EQUAL.
   b. DC: SUPPORT DC BUNDLES WITH ZIP TIES OF THE ADEQUATE LENGTH. ZIP TIES TO BE UV STABILIZED, BLACK NYLON, WITH TENSILE STRENGTH AT 12,000 PSI AS MANUFACTURED BY NELCO PRODUCTS OR EQUAL.
3. FASTENING JUMPERS: SECURE JUMPERS TO THE SIDE ARMS OR HEAD FRAMES USING STAINLESS STEEL TIE WRAPS OR STAINLESS STEEL BUTTERFLY CLIPS.
4. CABLE INSTALLATION:
   a. INSPECT CABLE PRIOR TO USE FOR SHIPPING DAMAGE, NOTIFY THE CONSTRUCTION MANAGER.
   b. CABLE ROUTING: CABLE INSTALLATION SHALL BE PLANNED TO ENSURE THAT THE LINES WILL BE PROPERLY ROUTED IN THE CABLE ENVELOP AS INDICATED ON THE DRAWINGS. AVOID TWISTING AND CROSSOVERS.
   c. HOIST CABLE USING PROPER HOISTING GRIPS. DO NOT EXCEED MANUFACTURES RECOMMENDED MAXIMUM BEND RADIUS.
5. GROUNDING OF TRANSMISSION LINES: ALL TRANSMISSION LINES SHALL BE GROUNDED AS INDICATED ON DRAWINGS.
6. HYBRID CABLE COLOR CODING: ALL COLOR CODING SHALL BE AS REQUIRED PER SPRINT TS-0200 CURRENT VERSION.
7. HYBRID CABLE LABELING: INDIVIDUAL HYBRID AND DC BUNDLES SHALL BE LABELED ALPHA-NUMERICALLY ACCORDING TO SPRINT CELL SITE ENGINEERING NOTICE - EN 2012-001, REV 1

WEATHERPROOFING EXTERIOR CONNECTORS AND HYBRID CABLE GROUND KITS:

A. ALL FIBER & COAX CONNECTORS AND GROUND KITS SHALL BE WEATHERPROOFED.

B. WEATHERPROOFED USING ONE OF THE FOLLOWING METHODS. ALL INSTALLATIONS MUST BE DONE IN ACCORDANCE WITH THE MANUFACTURER'S RECOMMENDATIONS AND INDUSTRY BEST PRACTICES.

1. COLD SHRINK: ENCOMPASS CONNECTOR IN COLD SHRINK TUBING AND PROVIDE A DOUBLE WRAP OF 2" ELECTRICAL TAPE EXTENDING 2" BEYOND TUBING. PROVIDE 3M COLD SHRINK CXS SERIES OR EQUAL.
2. SELF-AMALGAMATING TAPE: CLEAN SURFACES. APPLY A DOUBLE WRAP OF SELF-AMALGAMATING TAPE 2" BEYOND CONNECTOR. APPLY A SECOND WRAP OF SELF-AMALGAMATING TAPE IN OPPOSITE DIRECTION. APPLY DOUBLE WRAP OF 2" WIDE ELECTRICAL TAPE EXTENDING 2" BEYOND THE SELF-AMALGAMATING TAPE.
3. 3M SLIM LOCK CLOSURE 716: SUBSTITUTIONS WILL NOT BE ALLOWED.
4. OPEN FLAME ON JOB SITE IS NOT ACCEPTABLE

SECTION 11 800 – INSTALLATION OF MULTIMODAL BASE STATIONS (MMBTS) AND RELATED EQUIPMENT

SUMMARY:

A. THIS SECTION SPECIFIES MMBTS CABINETS, POWER CABINETS, AND INTERNAL EQUIPMENT INCLUDING BY NOT LIMITED TO RECTIFIERS, POWER DISTRIBUTION UNITS, BASE BAND UNITS, SURGE ARRESTORS, BATTERIES, AND SIMILAR EQUIPMENT FURNISHED BY THE COMPANY FOR INSTALLATION BY THE CONTRACTOR (OFCI).

B. CONTRACTOR SHALL PROVIDE AND INSTALL ALL MISCELLANEOUS MATERIALS AND PROVIDE ALL LABOR REQUIRED FOR INSTALLATION EQUIPMENT IN EXISTING CABINET OR NEW CABINET AS SHOWN ON DRAWINGS AND AS REQUIRE BY THE APPLICABLE INSTALLATION MOPS.

C. COMPLY WITH MANUFACTURERS INSTALLATION AND START-UP REQUIREMENTS

DC CIRCUIT BREAKER LABELING

A. LABEL CIRCUIT BREAKERS ACCORDING TO SPRINT CELL SITE ENGINEERING NOTICE - EN 2012-001, REV 1.

SECTION 11 800 – INSTALLATION OF MULTIMODAL BASE TRANSCIEVER STATIONS (MMBTS) AND RELATED EQUIPMENT

SUMMARY:

A. THIS SECTION SPECIFIES MMBTS CABINETS, POWER CABINETS, AND INTERNAL EQUIPMENT INCLUDING BY NOT LIMITED TO RECTIFIERS, POWER DISTRIBUTION UNITS, BASE BAND UNITS, SURGE ARRESTORS, BATTERIES, AND SIMILAR EQUIPMENT FURNISHED BY THE COMPANY FOR INSTALLATION BY THE CONTRACTOR (OFCI).

B. CONTRACTOR SHALL PROVIDE AND INSTALL ALL MISCELLANEOUS MATERIALS AND PROVIDE ALL LABOR REQUIRED FOR INSTALLATION EQUIPMENT IN EXISTING CABINET OR NEW CABINET AS SHOWN ON DRAWINGS AND AS REQUIRE BY THE APPLICABLE INSTALLATION MOPS.

C. COMPLY WITH MANUFACTURERS INSTALLATION AND START-UP REQUIREMENTS

SUPPORTING DEVICES:

A. MANUFACTURED STRUCTURAL SUPPORT MATERIALS: SUBJECT TO COMPLIANCE WITH REQUIREMENTS, PROVIDE PRODUCTS BY THE FOLLOWING:
   1. ALLIED TUBE AND CONDUIT
   2. B-LINE SYSTEM
   3. UNISTRUT DIVERSIFIED PRODUCTS
   4. THOMAS & BETTS

B. FASTENERS: TYPES, MATERIALS, AND CONSTRUCTION FEATURES AS FOLLOWS:
   1. EXPANSION ANCHORS: CARBON STEEL WEDGE OR SLEEVE TYPE.
   2. POWER-DRIVEN THREADED STUDS: HEAT-TREATED STEEL, DESIGNED SPECIFICALLY FOR THE INTENDED SERVICE.
   3. FASTEN BY MEANS OF WOOD SCREWS ON WOOD.
   4. TOGGLE BOLTS ON HOLLOW MASONRY UNITS.
   5. CONCRETE INSERTS OR EXPANSION BOLTS ON CONCRETE OR SOLID MASONRY.
   6. MACHINE SCREWS, WELDED THREADED STUDS, OR SPRING-TENSION CLAMPS ON STEEL.
   7. EXPLOSIVE DEVICES FOR ATTACHING HANGERS TO STRUCTURE SHALL NOT BE PERMITTED.
   8. DO NOT WELD CONDUIT, PIPE STRAPS, OR ITEMS OTHER THAN THREADED STUDS TO STEEL STRUCTURES.
   9. IN PARTITIONS OF LIGHT STEEL CONSTRUCTION, USE SHEET METAL SCREWS.

SUPPORTING DEVICES:

A. INSTALL SUPPORTING DEVICES TO FASTEN ELECTRICAL COMPONENTS SECURELY AND PERMANENTLY IN ACCORDANCE WITH NEC.

B. COORDINATE WITH THE BUILDING STRUCTURAL SYSTEM AND WITH OTHER TRADES.

C. UNLESS OTHERWISE INDICATED ON THE DRAWINGS, FASTEN ELECTRICAL ITEMS AND THEIR SUPPORTING HARDWARE SECURELY TO THE STRUCTURE IN ACCORDANCE WITH THE FOLLOWING:

D. ENSURE THAT THE LOAD APPLIED BY ANY FASTENER DOES NOT EXCEED 25 PERCENT OF THE PROOF TEST LOAD.

E. USE VIBRATION AND SHOCK-RESISTANT FASTENERS FOR ATTACHMENTS TO CONCRETE SLABS.

ELECTRICAL IDENTIFICATION:

A. UPDATE AND PROVIDE TYPED CIRCUIT BREAKER SCHEDULES IN THE MOUNTING BRACKET, INSIDE DOORS OF AC PANEL BOARDS WITH ANY CHANGES MADE TO THE AC SYSTEM.

B. BRANCH CIRCUITS FEEDING AVIATION OBSTRUCTION LIGHTING EQUIPMENT SHALL BE CLEARLY IDENTIFIED AS SUCH AT THE BRANCH CIRCUIT PANELBOARD.

SECTION 26 200 – ELECTRICAL MATERIALS AND EQUIPMENT

CONDUIT:

A. RIGID GALVANIZED STEEL (RGS) CONDUIT SHALL BE USED FOR EXTERIOR LOCATIONS ABOVE GROUND AND IN UNFINISHED INTERIOR LOCATIONS AND FOR ENCASED RUNS IN CONCRETE. RIGID CONDUIT AND FITTINGS SHALL BE STEEL, COATED WITH ZINC EXTERIOR AND INTERIOR BY THE HOT DIP GALVANIZING PROCESS. CONDUIT SHALL BE PRODUCED TO ANSI SPECIFICATIONS C80.1, FEDERAL SPECIFICATION WW-C-581 AND SHALL BE LISTED WITH THE UNDERWRITERS' LABORATORIES. FITTINGS SHALL BE THREADED - SET SCREW OR COMPRESSION FITTINGS WILL NOT BE ACCEPTABLE. RGS CONDUITS SHALL BE MANUFACTURED BY ALLIED, REPUBLIC OR WHEATLAND.

B. UNDERGROUND CONDUIT IN CONCRETE SHALL BE POLYVINYLCHLORIDE (PVC) SUITABLE FOR DIRECT BURIAL AS APPLICABLE. JOINTS SHALL BE BELLED, AND FLUSH SOLVENT WELDED IN ACCORDANCE WITH MANUFACTURER'S INSTRUCTIONS. CONDUIT SHALL BE CARLON ELECTRICAL PRODUCTS OR APPROVED EQUAL.

C. TRANSITIONS BETWEEN PVC AND RIGID (RGS) SHALL BE MADE WITH PVC COATED METALLIC LONG SWEEP RADIUS ELBOWS.

D. EMT OR RIGID GALVANIZED STEEL CONDUIT MAY BE USED IN FINISHED SPACES CONCEALED IN WALLS AND CEILINGS. EMT SHALL BE MILD STEEL, ELECTRICALLY WELDED, ELECTRO-GALVANIZED OR HOT-DIPPED GALVANIZED AND PRODUCED TO ANSI SPECIFICATION C80.3, FEDERAL SPECIFICATION WW-C-563, AND SHALL BE UL LISTED. EMT SHALL BE MANUFACTURED BY ALLIED, REPUBLIC OR WHEATLAND, OR APPROVED EQUAL. FITTINGS SHALL BE METALLIC COMPRESSION. SET SCREW CONNECTIONS SHALL NOT BE ACCEPTABLE.

E. LIQUID TIGHT FLEXIBLE METALLIC CONDUIT SHALL BE USED FOR FINAL CONNECTION TO EQUIPMENT. FITTINGS SHALL BE METALLIC GLAND TYPE COMPRESSION FITTINGS, MAINTAINING THE INTEGRITY OF CONDUIT SYSTEM. SET SCREW CONNECTIONS SHALL NOT BE ACCEPTABLE. MAXIMUM LENGTH OF FLEXIBLE CONDUIT SHALL NOT EXCEED 6-FEET. LFMC SHALL BE PROTECTED AND SUPPORTED AS REQUIRE BY NEC. MANUFACTURERS OF FLEXIBLE CONDUITS SHALL BE CAROL, ANACONDA METAL HOSE OR UNIVERSAL METAL HOSE, OR APPROVED EQUAL.

F. MINIMUM SIZE CONDUIT SHALL BE 3/4 INCH (21MM).

HUBS AND BOXES:

A. AT ENTRANCES TO CABINETS OR OTHER EQUIPMENT NOT HAVING INTEGRAL THREADED HUBS PROVIDE METALLIC THREADED HUBS OF THE SIZE AND CONFIGURATION REQUIRED. HUB SHALL INCLUDE LOCKNUT AND NEOPRENE O-RING SEAL. PROVIDE IMPACT RESISTANT 105 DEGREE C PLASTIC BUSHINGS TO PROTECT CABLE INSULATION.

B. CABLE TERMINATION FITTINGS FOR CONDUIT
   1. CABLE TERMINATORS FOR RGS CONDUITS SHALL BE TYPE CRC BY O-Z/GEDNEY OR EQUAL.
   2. CABLE TERMINATORS FOR LFMC SHALL BE ETCO - CL2075; OR MADE FOR THE PURPOSE PRODUCTS BY ROXTEC.

C. EXTERIOR PULL BOXES AND PULL BOXES IN INTERIOR INDUSTRIAL AREAS SHALL BE PLATED CAST ALLOY, HEAVY DUTY, WEATHERPROOF, DUST PROOF, WITH GASKET, PLATED IRON ALLOY COVER AND STAINLESS STEEL COVER SCREWS, CROUSE-HINDS WAB SERIES OR EQUAL.

D. CONDUIT OUTLET BODIES SHALL BE PLATED CAST ALLOY WITH SIMILAR GASKETED COVERS. OUTLET BODIES SHALL BE OF THE CONFIGURATION AND SIZE SUITABLE FOR THE APPLICATION. PROVIDE CROUSE-HINDS FORM 8 OR EQUAL.

E. MANUFACTURER FOR BOXES AND COVERS SHALL BE HOFFMAN, SQUARE "D", CROUSE-HINDS, COOPER, ADALET, APPLETON, O-Z GEDNEY, RACO, OR APPROVED EQUAL.

SUPPLEMENTAL GROUNDING SYSTEM

A. FURNISH AND INSTALL A SUPPLEMENTAL GROUNDING SYSTEM AS INDICATED ON THE DRAWINGS. SUPPORT SYSTEM WITH NON-MAGNETIC STAINLESS STEEL CLIPS WITH RUBBER GROMMETS. GROUNDING CONNECTORS SHALL BE TINNED COPPER WIRE, SIZES AS INDICATED ON THE DRAWINGS. PROVIDE STRANDED OR SOLID BARE OR INSULATED CONDUCTORS AS INDICATED.

B. SUPPLEMENTAL GROUNDING SYSTEM: ALL CONNECTIONS TO BE MADE WITH CAD WELDS, EXCEPT AT EQUIPMENT USE LUGS OR OTHER AVAILABLE GROUNDING MEANS AS REQUIRED BY MANUFACTURER; AT GROUND BARS USE TWO HOLE SPADES WITH NO OX.

C. STOLEN GROUND-BARS: IN THE EVENT OF STOLEN GROUND BARS, CONTACT SPRINT CM FOR REPLACEMENT INSTRUCTION USING THREADED ROD KITS.

EXISTING STRUCTURE:

A. EXISTING EXPOSED WIRING AND ALL EXPOSED OUTLETS, RECEPTACLES, SWITCHES, DEVICES, BOXES, AND OTHER EQUIPMENT THAT ARE NOT TO BE UTILIZED IN THE COMPLETED PROJECT SHALL BE REMOVED OR DE-ENERGIZED AND CAPPED IN THE WALL, CEILING, OR FLOOR SO THAT THEY ARE CONCEALED AND SAFE. WALL, CEILING, OR FLOOR SHALL BE PATCHED TO MATCH THE ADJACENT CONSTRUCTION.

CONDUIT AND CONDUCTOR INSTALLATION:

A. CONDUITS SHALL BE FASTENED SECURELY IN PLACE WITH APPROVED NON-PERFORATED STRAPS AND HANGERS. EXPLOSIVE DEVICES FOR ATTACHING HANGERS TO STRUCTURE WILL NOT BE PERMITTED. CLOSELY FOLLOW THE LINES OF THE STRUCTURE, MAINTAIN CLOSE PROXIMITY TO THE STRUCTURE AND KEEP CONDUITS IN TIGHT ENVELOPES. CHANGES IN DIRECTION TO ROUTE AROUND OBSTACLES SHALL BE MADE WITH CONDUIT OUTLET BODIES. CONDUIT SHALL BE INSTALLED IN A NEAT AND WORKMANLIKE MANNER, PARALLEL AND PERPENDICULAR TO STRUCTURE WALL AND CEILING LINES. ALL CONDUIT SHALL BE FISHED TO CLEAR OBSTRUCTIONS. ENDS OF CONDUITS SHALL BE TEMPORARILY CAPPED TO PREVENT CONCRETE, PLASTER OR DIRT FROM ENTERING. CONDUITS SHALL BE RIGIDLY CLAMPED TO BOXES BY GALVANIZED MALLEABLE IRON BUSHING ON INSIDE AND GALVANIZED MALLEABLE IRON LOCKNUT ON OUTSIDE AND INSIDE.

B. CONDUCTORS SHALL BE PULLED IN ACCORDANCE WITH ACCEPTED GOOD PRACTICE.

Sprint VISION
1 INTERNATIONAL BLVD, SUITE 800
MAHWAH, NJ 07495
(201) 684-4000

J LEE ASSOCIATES, LLC
753 FOREST STREET
MARLBOROUGH, MA 01752-3047
PHONE: (800) 825-6460
www.guardian-energy.com

ADVANCED ENGINEERING GROUP, P.C.
Civil Engineering - Site Development
Surveying - Telecommunications
500 NORTH BROADWAY
EAST PROVIDENCE, RI 02914
PH: 401-354-2403
FAX: 401-633-6354

COMMONWEALTH OF MASSACHUSETTS
MARC R. CHRETIEN
CIVIL
No. 40313
REGISTERED PROFESSIONAL ENGINEER

ENGINEER/LAND SURVEYOR DATE

IT IS A VIOLATION OF LAW FOR ANY PERSON, UNLESS THEY ARE ACTING UNDER THE DIRECTION OF A LICENSED PROFESSIONAL ENGINEER, TO ALTER THIS DOCUMENT.

REVISIONS

REV. #	DATE	DESCRIPTION
1	03/24/14	ISSUED FOR CONSTRUCTION
0	02/07/14	ISSUED FOR REVIEW

PROJECT NO.		SCALE
N/A	DESIGNED BY: MRC	
	DRAWN BY: AAB	
	CHECK'D BY: MRC	

PROJECT INFORMATION

TAGE INN
BS54XC903

844 McGRATH HIGHWAY
SOMERVILLE, MA 02143

DRAWING TITLE

OUTLINE SPECIFICATIONS

DRAWING NUMBER

SP-3

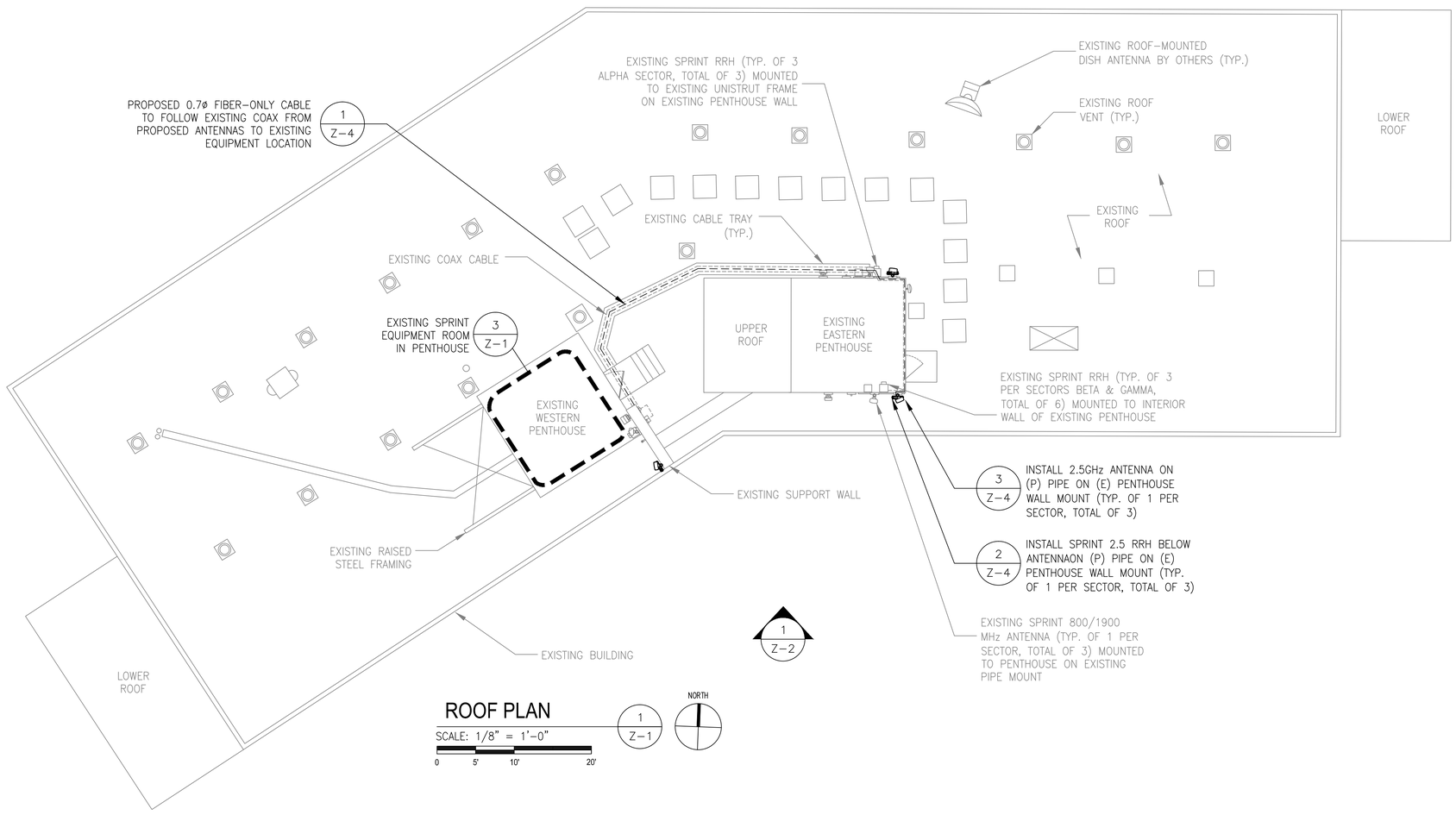

ROOF PLAN

SCALE: 1/8" = 1'-0"

Sprint VISION

1 INTERNATIONAL BLVD, SUITE 800
MAHWAH, NJ 07495
(201) 684-4000

J LEE ASSOCIATES, LLC

753 FOREST STREET
MARLBOROUGH, MA 01752-3047
PHONE: (800) 825-6460
www.guardian-energy.com

ADVANCED ENGINEERING GROUP, P.C.
Civil Engineering - Site Development
Surveying - Telecommunications
500 NORTH BROADWAY
EAST PROVIDENCE, RI 02914
PH: 401-354-2403
FAX: 401-633-6354

COMMONWEALTH OF MASSACHUSETTS
MARC R. CHRETIEN
CIVIL
No. 40313
REGISTERED PROFESSIONAL ENGINEER

ENGINEER/LAND SURVEYOR DATE

IT IS A VIOLATION OF LAW FOR ANY PERSON, UNLESS THEY ARE ACTING UNDER THE DIRECTION OF A LICENSED PROFESSIONAL ENGINEER, TO ALTER THIS DOCUMENT.

REVISIONS

REV. #	DATE	DESCRIPTION
1	03/24/14	ISSUED FOR CONSTRUCTION
0	02/07/14	ISSUED FOR REVIEW

PROJECT NO.		SCALE
N/A	DESIGNED BY: MRC DRAWN BY: AAB CHECK'D BY: MRC	1" = 10'

PROJECT INFORMATION

TAGE INN
BS54XC903

844 McGRATH HIGHWAY
SOMERVILLE, MA 02143

DRAWING TITLE

ROOF PLAN

DRAWING NUMBER

A-1

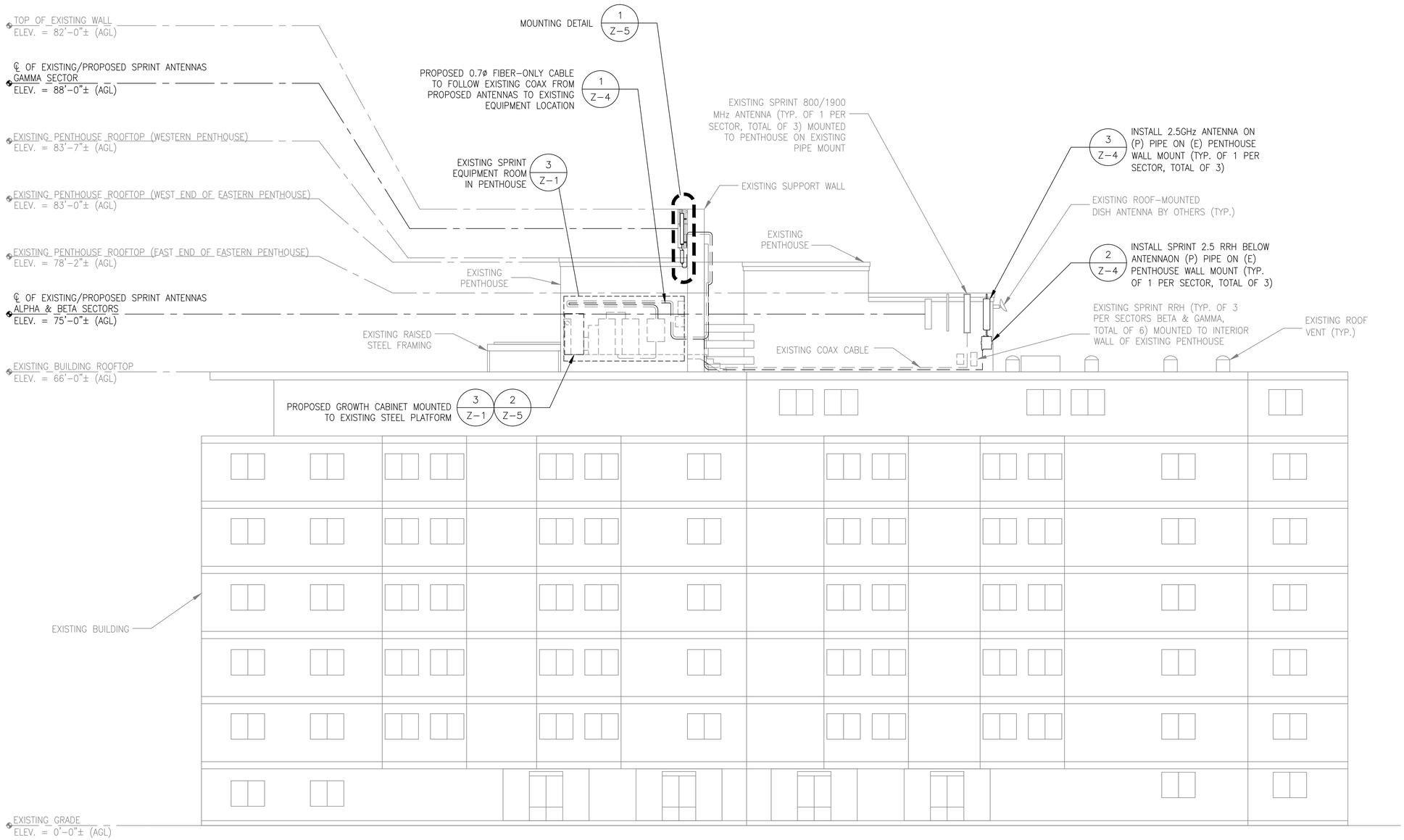

SOUTH ELEVATION

1 Z-2

SCALE: 1/8" = 1'-0"

0 5' 10' 20'

Sprint VISION

1 INTERNATIONAL BLVD, SUITE 800
MAHWAH, NJ 07495
(201) 684-4000

J LEE ASSOCIATES, LLC

753 FOREST STREET
MARLBOROUGH, MA 01752-3047
PHONE: (800) 825-6460
www.guardian-energy.com

ADVANCED ENGINEERING GROUP, P.C.
Civil Engineering - Site Development
Surveying - Telecommunications
500 NORTH BROADWAY
EAST PROVIDENCE, RI 02914
PH: 401-354-2403
FAX: 401-633-6354

COMMONWEALTH OF MASSACHUSETTS
MARC R. CHRETIEN
CIVIL
No. 40313
REGISTERED PROFESSIONAL ENGINEER

ENGINEER/LAND SURVEYOR DATE

IT IS A VIOLATION OF LAW FOR ANY PERSON, UNLESS THEY ARE ACTING UNDER THE DIRECTION OF A LICENSED PROFESSIONAL ENGINEER, TO ALTER THIS DOCUMENT.

REVISIONS

REV. #	DATE	DESCRIPTION
1	03/24/14	ISSUED FOR CONSTRUCTION
0	02/07/14	ISSUED FOR REVIEW

PROJECT NO.		SCALE
N/A	DESIGNED BY: MRC DRAWN BY: AAB CHECK'D BY: MRC	AS SHOWN

PROJECT INFORMATION

TAGE INN
BS54XC903

844 McGRATH HIGHWAY
SOMERVILLE, MA 02143

DRAWING TITLE

ELEVATION

DRAWING NUMBER

A-2

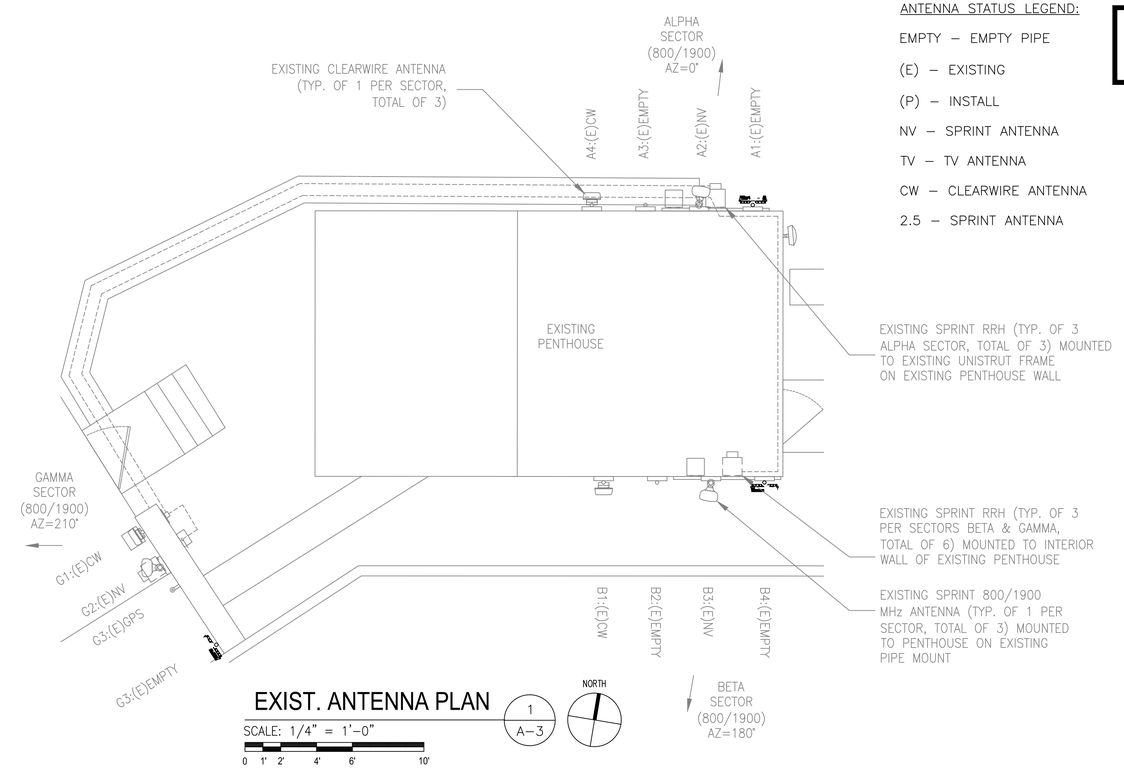

EXIST. ANTENNA PLAN

1 / A-3

SCALE: 1/4" = 1'-0"

0 1' 2' 4' 6' 10'

ANTENNA STATUS LEGEND:

EMPTY – EMPTY PIPE

(E) – EXISTING

(P) – INSTALL

NV – SPRINT ANTENNA

TV – TV ANTENNA

CW – CLEARWIRE ANTENNA

2.5 – SPRINT ANTENNA

NOTE:

EXISTING AZIMUTHS FROM SPRINT SITE AUDIT DATED 10/09/13

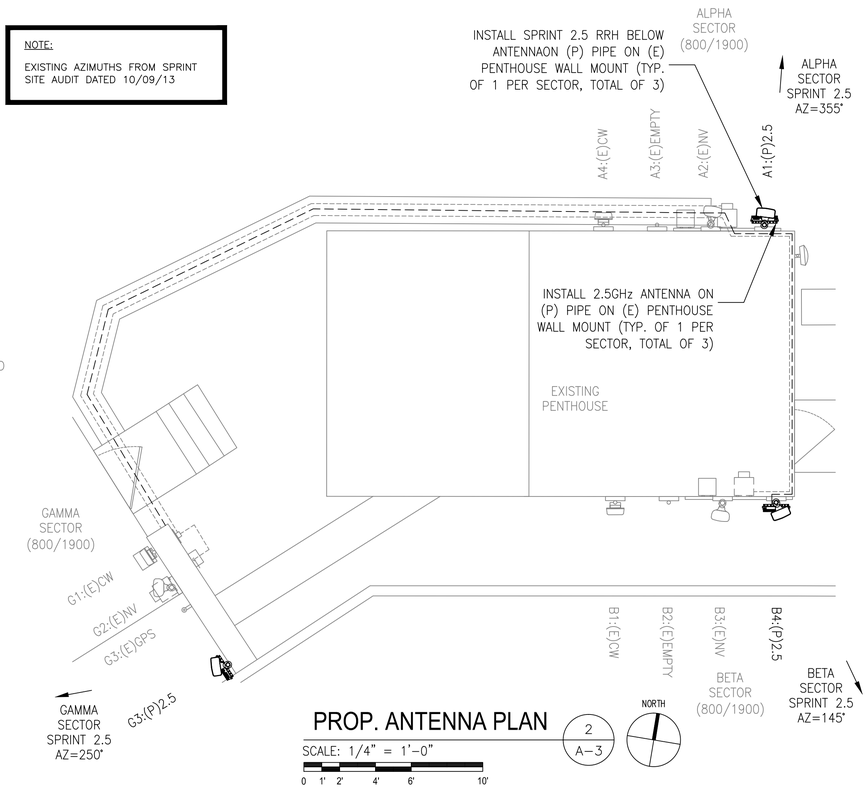

PROP. ANTENNA PLAN

2 / A-3

SCALE: 1/4" = 1'-0"

0 1' 2' 4' 6' 10'

NOTE:

EXISTING AZIMUTHS FROM SPRINT SITE AUDIT DATED 09/12/13

ANTENNA STATUS LEGEND:

EMPTY – EMPTY PIPE

(E) – EXISTING

(P) – INSTALL

NV – SPRINT ANTENNA

2.5 – SPRINT ANTENNA

MANUF: RFS
MODEL: APXVTM14-C-I20
LENGTH: 56.3
WIDTH: 12.6
DEPTH: 6.3
WEIGHT: 70 LBS
AREA: 4.9 SF

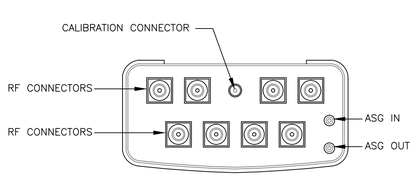

PLAN VIEW

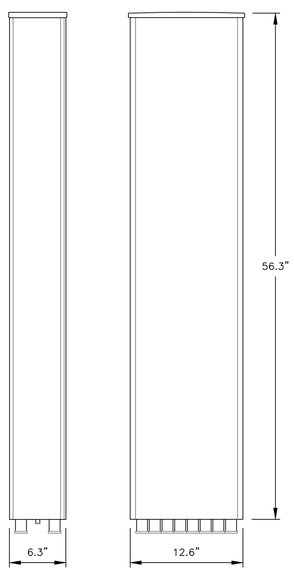

2.5 ANTENNA SPECIFICATIONS

3 / A-3

SCALE: N.T.S.

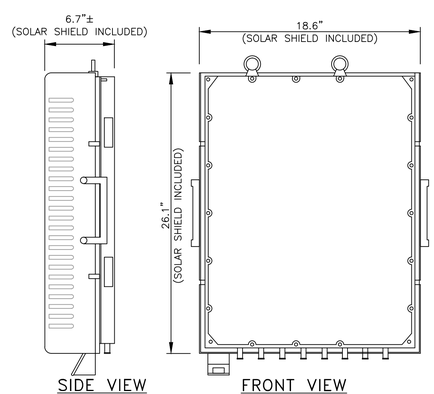

SIDE VIEW

FRONT VIEW

MANUF: ALCATEL-LUCENT
MODEL: TD-RRH8x20-25
LENGTH: 26.1
WIDTH: 18.6
DEPTH: 6.7
WEIGHT: 70 LBS
AREA: 3.5 SF

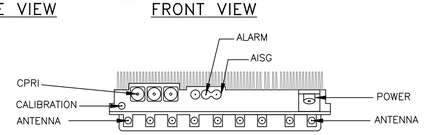

PLAN VIEW

2.5 RRH'S

4 / A-3

SCALE: N.T.S.

Sprint VISION

1 INTERNATIONAL BLVD, SUITE 800
MAHWAH, NJ 07495
(201) 684-4000

J LEE ASSOCIATES, LLC

753 FOREST STREET
MARLBOROUGH, MA 01752-3047
PHONE: (800) 825-6460
www.guardian-energy.com

ADVANCED ENGINEERING GROUP, P.C.

Civil Engineering - Site Development
Surveying - Telecommunications

500 NORTH BROADWAY
EAST PROVIDENCE, RI 02914
PH: 401-354-2403
FAX: 401-633-6354

COMMONWEALTH OF MASSACHUSETTS
MARC R. CHRETIEN
CIVIL
No. 40313
REGISTERED PROFESSIONAL ENGINEER

ENGINEER/LAND SURVEYOR DATE

IT IS A VIOLATION OF LAW FOR ANY PERSON, UNLESS THEY ARE ACTING UNDER THE DIRECTION OF A LICENSED PROFESSIONAL ENGINEER, TO ALTER THIS DOCUMENT.

REVISIONS

REV. #	DATE	DESCRIPTION
1	03/24/14	ISSUED FOR CONSTRUCTION
0	02/07/14	ISSUED FOR REVIEW

PROJECT NO.		SCALE
N/A	DESIGNED BY: MRC DRAWN BY: AAB CHECK'D BY: MRC	AS SHOWN

PROJECT INFORMATION

TAGE INN
BS54XC903

844 McGRATH HIGHWAY
SOMERVILLE, MA 02143

DRAWING TITLE

ANTENNA PLANS & DETAILS

DRAWING NUMBER

A-3

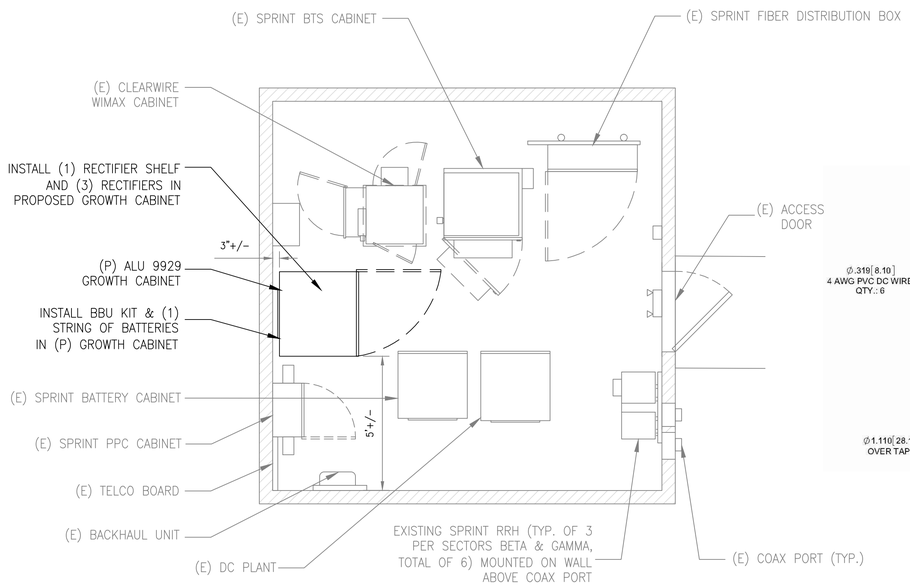

EQUIPMENT ROOM PLAN

SCALE: 3/8" = 1'-0"

0 1' 2' 4' 8'

1 / A-4

NORTH

INSTALL (1) BATTERY STRING IN (E) BATTERY CABINET IN EMPTY TOP BAY

EXIST. BATTERY CABINET

SCALE: N.T.S.

2 / A-4

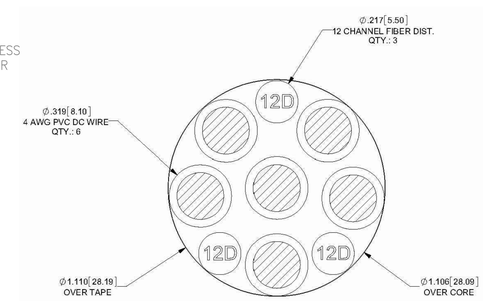

4 AWG

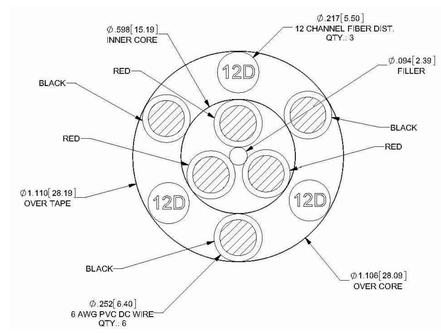

8 AWG & 6 AWG

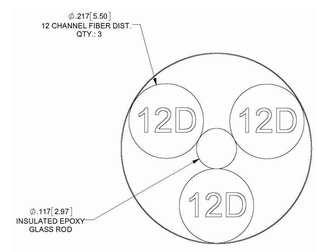

FIBER ONLY

HYBRID CABLE DC CONDUCTOR SIZE GUIDELINE
MANUF: RFS

	CABLE	LENGTH	DC CONDUCTOR	CABLE DIAMETER
(*)	FIBER ONLY	VARIES	USE NV HYBRIFLEX	5/8"
	HYBRIFLEX	<200'	8 AWG	1-1/4"
	HYBRIFLEX	225-300'	6 AWG	1-1/4"
	HYBRIFLEX	325-375'	4 AWG	1-1/4"

RFS HYBRIFLEX RISER CABLE SCHEDULE

Fiber Only (Existing DC Power)		**Hybrid cable** MN: HB058-M12-050F 12x multi-mode fiber pairs, Top: Outdoor protected connectors, Bottom: LC Connectors, 5/8 cable, 50 ft	50 ft
		MN: HB058-M12-075F	75 ft
	(*)	MN: HB058-M12-100F	100 ft
		MN: HB058-M12-125F	125 ft
		MN: HB058-M12-150F	150 ft
		MN: HB058-M12-175F	175 ft
		MN: HB058-M12-200F	200 ft
8 AWG Power		**Hybrid cable** MN: HB114-08U3M12-050F 3x 8 AWG power pairs, 12x multi-mode fiber pairs, Outdoor rated connectors & LC Connectors, 1 1/4 cable, 50 ft	50 ft
		MN: HB114-08U3M12-075F	75 ft
		MN: HB114-08U3M12-100F	100 ft
		MN: HB114-08U3M12-125F	125 ft
		MN: HB114-08U3M12-150F	150 ft
		MN: HB114-08U3M12-175F	175 ft
		MN: HB114-08U3M12-200F	200 ft
6 AWG Power		**Hybrid cable** MN: HB114-13U3M12-225F 3x 6 AWG power pair, 12x multi-mode fiber pairs, Outdoor rated connectors & LC Connectors, 1 1/4 cable, 225 ft	225 ft
		MN: HB114-13U3M12-250F	250 ft
		MN: HB114-13U3M12-275F	275 ft
		MN: HB114-13U3M12-300F	300 ft
4 AWG Power		**Hybrid cable** MN: HB114-21U3M12-325F 3x 4 AWG power pair, 12x multi-mode fiber pairs, Outdoor rated connectors & LC Connectors, 1 1/4 cable, 325 ft	325 ft
		MN: HB114-21U3M12-350F	350 ft
		MN: HB114-21U3M12-375F	375 ft

RFS HYBRIFLEX JUMPER CABLE SCHEDULE

Fiber Only		**Hybrid Jumper cable** MN: HBF012-M3-5F1 5 ft, 3x multi-mode fiber pairs, Outdoor & LC connectors, 1/2 cable	5 ft
	(*)	MN: HBF012-M3-10F1	10 ft
		MN: HBF012-M3-15F1	15 ft
		MN: HBF012-M3-20F1	20 ft
		MN: HBF012-M3-25F1	25 ft
		MN: HBF012-M3-30F1	30 ft
8 AWG Power		**Hybrid Jumper cable** MN: HBF058-08U1M3-5F1 5 ft, 1x 8 AWG power pair, 3x multi-mode fiber pairs, Outdoor & LC Connectors, 5/8 cable	5 ft
		MN: HBF058-08U1M3-10F1	10 ft
		MN: HBF058-08U1M3-15F1	15 ft
		MN: HBF058-08U1M3-20F1	20 ft
		MN: HBF058-08U1M3-25F1	25 ft
		MN: HBF058-08U1M3-30F1	30 ft
6 AWG Power		**Hybrid Jumper cable** MN: HBF058-13U1M3-5F1 5 ft, 1x 6 AWG power pair, 3x multi-mode fiber pairs, Outdoor & LC Connectors, 5/8 cable	5 ft
		MN: HBF058-13U1M3-10F1	10 ft
		MN: HBF058-13U1M3-15F1	15 ft
		MN: HBF058-13U1M3-20F1	20 ft
		MN: HBF058-13U1M3-25F1	25 ft
		MN: HBF058-13U1M3-30F1	30 ft
4 AWG Power		**Hybrid Jumper cable** MN: HBF078-21U1M3-5F1 5 ft, 1x 4 AWG power pair, 3x multi-mode fiber pairs, Outdoor & LC Connectors, 7/8 cable	5 ft
		MN: HBF078-21U1M3-10F1	10 ft
		MN: HBF078-21U1M3-15F1	15 ft
		MN: HBF078-21U1M3-20F1	20 ft
		MN: HBF078-21U1M3-25F1	25 ft
		MN: HBF078-21U1M3-30F1	30 ft

* NOTE: SPRINT CM TO CONFIRM HYBRID RISER CABLE AND HYBRID JUMPER CABLE MODEL NUMBERS BEFORE PREPARING BOM.

2500MHz FIBER CABLE X-SECTION & DATA

SCALE: N.T.S.

3 / A-4

Sprint VISION
1 INTERNATIONAL BLVD, SUITE 800
MAHWAH, NJ 07495
(201) 684-4000

J LEE ASSOCIATES, LLC
753 FOREST STREET
MARLBOROUGH, MA 01752-3047
PHONE: (800) 825-6460
www.guardian-energy.com

ADVANCED ENGINEERING GROUP, P.C.
Civil Engineering - Site Development
Surveying - Telecommunications
500 NORTH BROADWAY
EAST PROVIDENCE, RI 02914
PH: 401-354-2403
FAX: 401-633-6354

COMMONWEALTH OF MASSACHUSETTS
MARC R. CHRETIEN
CIVIL
No. 40313
REGISTERED PROFESSIONAL ENGINEER

ENGINEER/LAND SURVEYOR DATE

IT IS A VIOLATION OF LAW FOR ANY PERSON, UNLESS THEY ARE ACTING UNDER THE DIRECTION OF A LICENSED PROFESSIONAL ENGINEER, TO ALTER THIS DOCUMENT.

REVISIONS

REV. #	DATE	DESCRIPTION
1	03/24/14	ISSUED FOR CONSTRUCTION
0	02/07/14	ISSUED FOR REVIEW

PROJECT NO.			SCALE
N/A	DESIGNED BY:	MRC	AS SHOWN
	DRAWN BY:	AAB	
	CHECK'D BY:	MRC	

PROJECT INFORMATION

TAGE INN
BS54XC903

844 McGRATH HIGHWAY
SOMERVILLE, MA 02143

DRAWING TITLE

EQUIPMENT PLAN, DETAILS & HYBRID CABLE SPECIFICATIONS

DRAWING NUMBER

A-4

2500MHz GROUND EQUIPMENT			
ITEM	QUANTITY	MODEL	DIMENSIONS & WEIGHT
BBU KIT	1	ALU	11.8"x19.0"x3.5"
GROWTH CABINET	1	ALU 9929	75.8"x35.4"x37.8" - 1000 LBS
TOP HAT	0	-	-
BATTERIES	4	ALU	10.1"x6.9"x17.6" - 105 LBS
RECTIFIER SHELF	0	-	-
RECTIFIER	0	-	-

2500MHz TOWER EQUIPMENT			
ITEM	QUANTITY	MODEL	DIMENSIONS & WEIGHT
ANTENNAS	3	RFS APXVTM14-C-120	56.3"x12.6"x6.3" - 56 LBS
RRH'S	3	TD-RRH8x20-25	26.1"x18.6"x6.7" - 70 LBS
FIBER	1	ALU FIBER ONLY	Ø0.7"x100'L - 0.12 LBS/FT
JUMPERS	27	-	Ø0.5x8'L
AISG RET CABLE	3	COMMSCOPE ATCB-B01-006	Ø0.315x8'L - 1.3 LBS

Sprint VISION

1 INTERNATIONAL BLVD, SUITE 800
MAHWAH, NJ 07495
(201) 684-4000

J LEE
ASSOCIATES, LLC

753 FOREST STREET
MARLBOROUGH, MA 01752-3047
PHONE: (800) 825-6460
www.guardian-energy.com

ADVANCED
ENGINEERING GROUP, P.C.
Civil Engineering - Site Development
Surveying - Telecommunications
500 NORTH BROADWAY
EAST PROVIDENCE, RI 02914
PH: 401-354-2403
FAX: 401-633-6354

COMMONWEALTH OF MASSACHUSETTS
MARC R. CHRETIEN
CIVIL
No. 40313
REGISTERED PROFESSIONAL ENGINEER

ENGINEER/LAND SURVEYOR DATE

IT IS A VIOLATION OF LAW FOR ANY PERSON,
UNLESS THEY ARE ACTING UNDER THE DIRECTION
OF A LICENSED PROFESSIONAL ENGINEER,
TO ALTER THIS DOCUMENT.

REVISIONS

REV. #	DATE	DESCRIPTION
1	03/24/14	ISSUED FOR CONSTRUCTION
0	02/07/14	ISSUED FOR REVIEW

PROJECT NO.			SCALE
N/A	DESIGNED BY:	MRC	AS SHOWN
	DRAWN BY:	AAB	
	CHECK'D BY:	MRC	

PROJECT INFORMATION

TAGE INN
BS54XC903

844 McGRATH HIGHWAY
SOMERVILLE, MA 02143

DRAWING TITLE

RF DATA SHEET &
BILL OF MATERIALS

DRAWING NUMBER

A-5

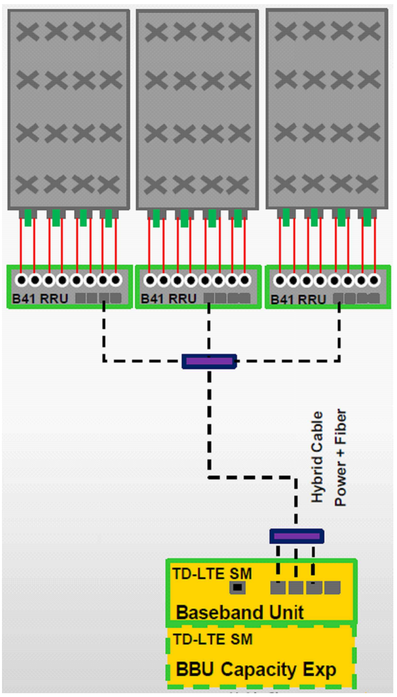

ALU 2.5GHz ALU SCENARIO 1 (1 / A–6)

SCALE: N.T.S.

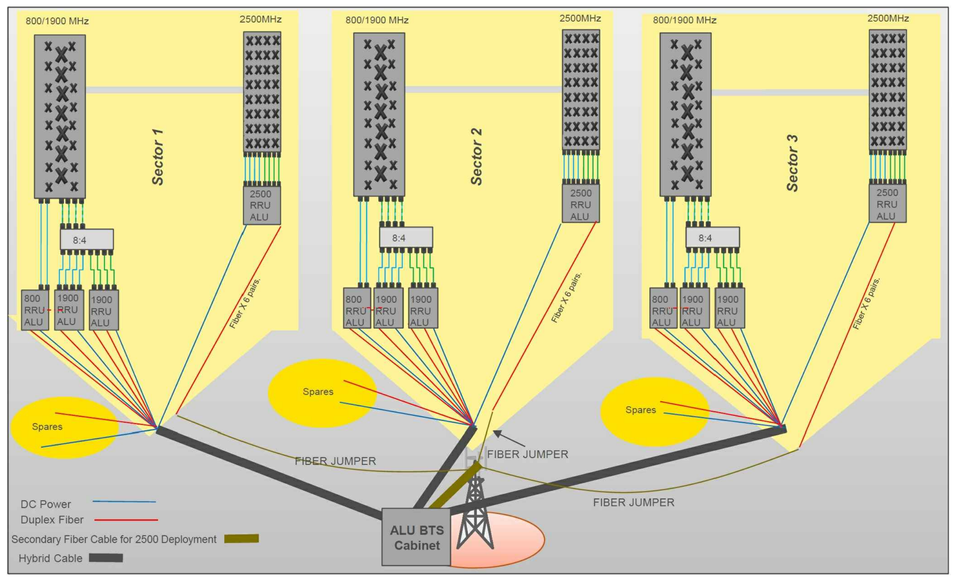

RAN WIRING DIAGRAM: ALU EQUIPMENT (2 / A–6)

SCALE: N.T.S.

NOTE:

GENERAL CONTRACTOR/TOWER CREW SHALL VERIFY THAT THE LATEST RF DATA SHEET IS USED FOR EQUIPMENT INSTALLATION.

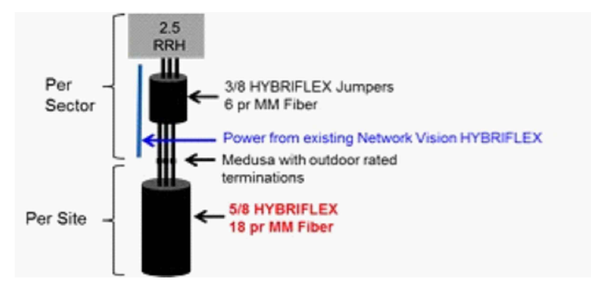

RFS 2.5GHz ALU SCENARIO 1 (3 / A–6)

SCALE: N.T.S.

DC POWER INSTALLATION NOTE (FIBER–ONLY SCENARIO):

USE SPARE DC CABLES COILED UP AT TOWER TOP NV ARRAY TO POWER UP 2.5 RRH. INSIDE EXISTING FIBER DISTRIBUTION BOX, TIE SPARE DC CONDUCTORS INTO EXISTING DC BREAKER PANEL PER APPROVED DC WIRING CONNECTIVITY OPTION (BASED ON NV HYBRIFLEX CABLE LENGTH). CONSULT WITH SPRINT CM TO DETERMINE APPROPRIATE DC CONNECTIVITY OPTION, PLUMBING DIAGRAM AND DC BREAKER SIZE.

Sprint VISION

1 INTERNATIONAL BLVD, SUITE 800
MAHWAH, NJ 07495
(201) 684-4000

J LEE ASSOCIATES, LLC

753 FOREST STREET
MARLBOROUGH, MA 01752-3047
PHONE: (800) 825-6460
www.guardian-energy.com

ADVANCED ENGINEERING GROUP, P.C.

Civil Engineering - Site Development
Surveying - Telecommunications

500 NORTH BROADWAY
EAST PROVIDENCE, RI 02914
PH: 401–354–2403
FAX: 401–633–6354

COMMONWEALTH OF MASSACHUSETTS
MARC R. CHRETIEN
CIVIL
No. 40313
REGISTERED PROFESSIONAL ENGINEER

ENGINEER/LAND SURVEYOR DATE

IT IS A VIOLATION OF LAW FOR ANY PERSON, UNLESS THEY ARE ACTING UNDER THE DIRECTION OF A LICENSED PROFESSIONAL ENGINEER, TO ALTER THIS DOCUMENT.

REVISIONS

REV. #	DATE	DESCRIPTION
1	03/24/14	ISSUED FOR CONSTRUCTION
0	02/07/14	ISSUED FOR REVIEW

PROJECT NO.			SCALE
N/A	DESIGNED BY:	MRC	AS SHOWN
	DRAWN BY:	AAB	
	CHECK'D BY:	MRC	

PROJECT INFORMATION

TAGE INN
BS54XC903

844 McGRATH HIGHWAY
SOMERVILLE, MA 02143

DRAWING TITLE

WIRING DIAGRAMS

DRAWING NUMBER

A-6

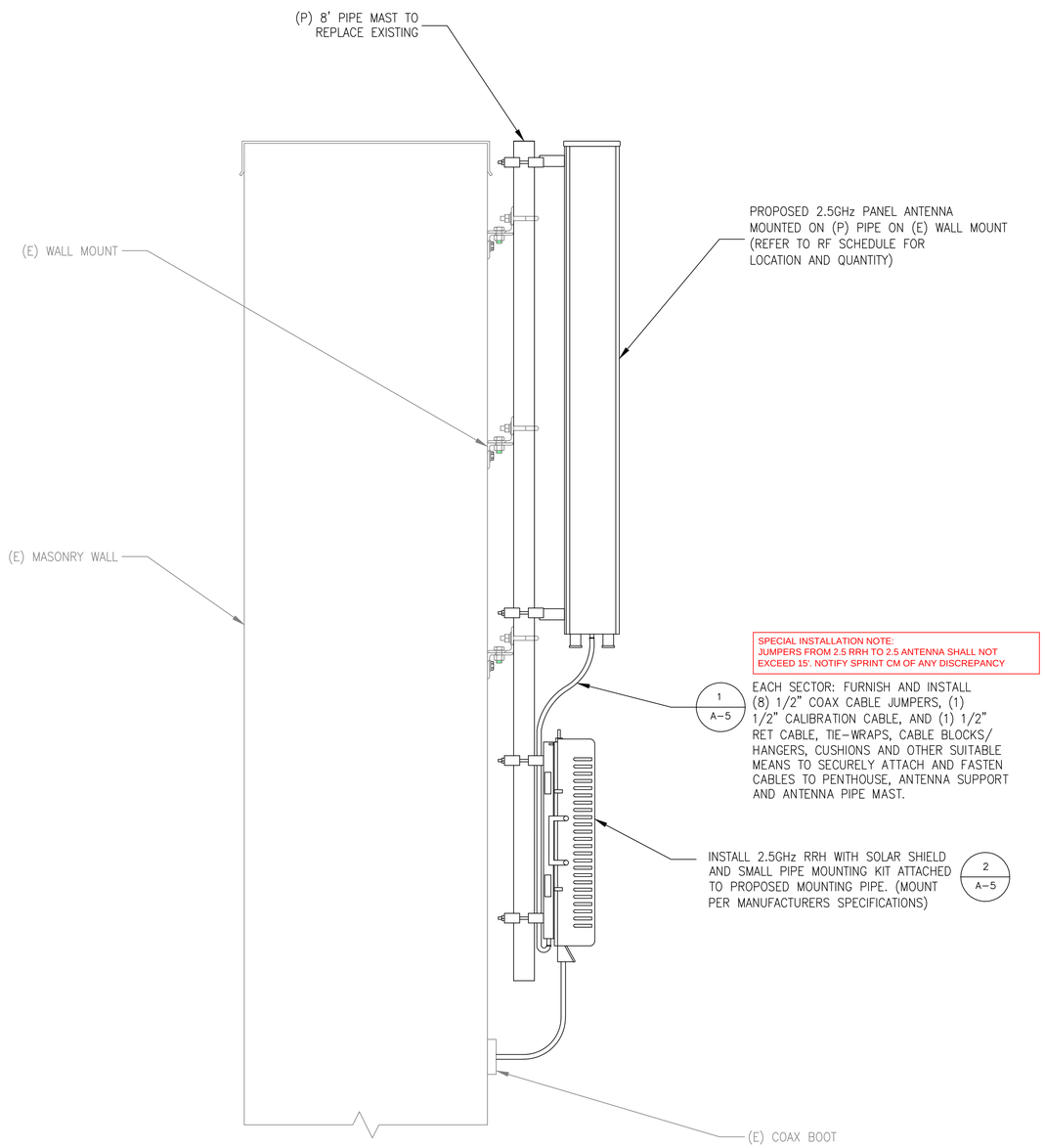

TYPICAL 2.5GHz ANTENNA & RRH MOUNTING DETAIL

1 / Z-5

SCALE: N.T.S.

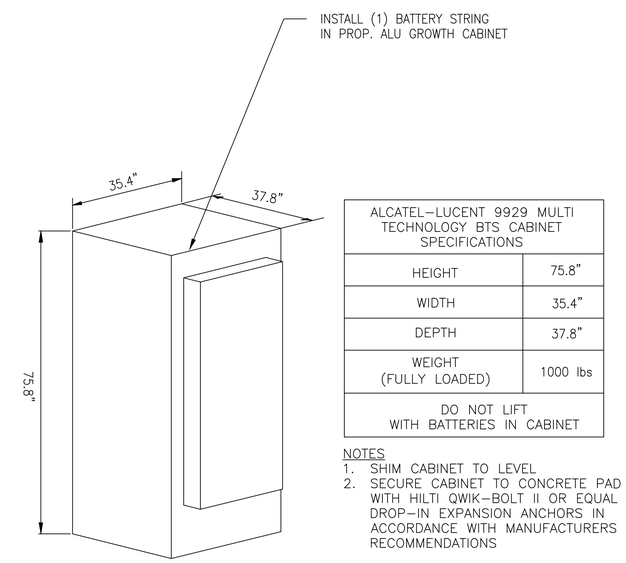

ALCATEL-LUCENT 9929 MULTI TECHNOLOGY BTS CABINET SPECIFICATIONS	
HEIGHT	75.8"
WIDTH	35.4"
DEPTH	37.8"
WEIGHT (FULLY LOADED)	1000 lbs
DO NOT LIFT WITH BATTERIES IN CABINET	

NOTES
1. SHIM CABINET TO LEVEL
2. SECURE CABINET TO CONCRETE PAD WITH HILTI QWIK-BOLT II OR EQUAL DROP-IN EXPANSION ANCHORS IN ACCORDANCE WITH MANUFACTURERS RECOMMENDATIONS

PROPOSED ALU 9929 GROWTH CABINET

2 / Z-5

SCALE: N.T.S.

Sprint VISION
1 INTERNATIONAL BLVD, SUITE 800
MAHWAH, NJ 07495
(201) 684-4000

J LEE ASSOCIATES, LLC
753 FOREST STREET
MARLBOROUGH, MA 01752-3047
PHONE: (800) 825-6460
www.guardian-energy.com

ADVANCED ENGINEERING GROUP, P.C.
Civil Engineering - Site Development
Surveying - Telecommunications
500 NORTH BROADWAY
EAST PROVIDENCE, RI 02914
PH: 401-354-2403
FAX: 401-633-6354

COMMONWEALTH OF MASSACHUSETTS
MARC R. CHRETIEN
CIVIL
No. 40313
REGISTERED PROFESSIONAL ENGINEER

ENGINEER/LAND SURVEYOR DATE

IT IS A VIOLATION OF LAW FOR ANY PERSON, UNLESS THEY ARE ACTING UNDER THE DIRECTION OF A LICENSED PROFESSIONAL ENGINEER, TO ALTER THIS DOCUMENT.

REVISIONS

REV. #	DATE	DESCRIPTION
1	03/24/14	ISSUED FOR CONSTRUCTION
0	02/07/14	ISSUED FOR REVIEW

PROJECT NO.			SCALE
N/A	DESIGNED BY:	MRC	AS SHOWN
	DRAWN BY:	AAB	
	CHECK'D BY:	MRC	

PROJECT INFORMATION

TAGE INN
BS54XC903

844 McGRATH HIGHWAY
SOMERVILLE, MA 02143

DRAWING TITLE

STRUCTURAL DETAILS

DRAWING NUMBER

S-1

NOTES TO CONTRACTOR:

1. CONTRACTOR SHALL INSPECT THE EXISTING CONDITIONS PRIOR TO SUBMITTING BID, ANY QUESTIONS ARISING DURING THE BID PERIOD IN REGARDS TO THE CONTRACTORS FUNCTIONS, THE SCOPE OF WORK, OR ANY OTHER ISSUE RELATED TO THIS PROJECT SHALL BE BROUGHT UP DURING THE BID PERIOD WITH THE ENGINEER FOR CLARIFICATION, NOT AFTER THE CONTRACT HAS BEEN AWARDED.
2. THE CONTRACTOR SHALL BE RESPONSIBLE FOR OBTAINING ALL PERMITS AND PAY ALL FEES AS MAY BE REQUIRED FOR ELECTRICAL WORK AND FOR SCHEDULING OF ALL INSPECTIONS AS REQUIRED WITH LOCAL AUTHORITY.
3. UTILITY SERVICES SHOWN ARE PROPOSED, THE ELECTRIC CONTRACTOR SHALL COORDINATE EXACT TELEPHONE AND ELECTRIC SERVICE CONNECTION POINTS, ROUTING AND ASSOCIATED REQUIREMENTS WITH LOCAL UTILITY COMPANIES & NEXTEL CONSTRUCTION MANAGER.
4. THE CONTRACTOR SHALL PROVIDE TEMPORARY POWER AND LIGHTING AS REQUIRED FOR THE WORK.
5. LOCATION OF EQUIPMENT, CONDUIT AND DEVICES SHOWN ON THE DRAWINGS ARE APPROXIMATE AND SHALL BE COORDINATED WITH FIELD CONDITIONS PRIOR TO ROUGH-IN.
6. THE CONDUIT RUNS AS SHOWN ON THE PLANS ARE APPROXIMATE. EXACT LOCATION AND ROUTING SHALL BE PER EXISTING FIELD CONDITIONS.
7. PROVIDE PULL BOXES AND JUNCTION BOXES WHERE SHOWN OR REQUIRED BY NEC.
8. ALL CONDUITS SHALL BE MET WITH BENDS MADE IN ACCORDANCE WITH NEC TABLE 346-10, NO RIGHT ANGLE DEVICE OTHER THAN STANDARD CONDUIT ELBOWS WITH 12" MINIMUM INSIDE SWEEPS FOR ALL CONDUITS 2" OR LARGER.
9. ALL CONDUIT TERMINATIONS SHALL BE PROVIDED WITH PLASTIC THROAT INSULATING GROUNDING BUSHINGS.
10. ALL WIRE SHALL BE TYPE THWN, SOLID, ANNEALED COPPER UP TO SIZE #10 AWG (#8 AND LARGER SHALL BE CONCENTRIC STRANDED) 75 DEGREE C, (167 DEGREES F), 98% CONDUCTIVITY, MINIMUM #12.
11. ALL WIRES SHALL BE TAGGED AT ALL PULL BOXES, J-BOXES, EQUIPMENT BOXES AND CABINETS WITH APPROVED PLASTIC TAGS, ACTION CRAFT, BRADY, OR APPROVED EQUAL.
12. ALL NEW MATERIAL SHALL HAVE A U.L. LABEL.
13. CONDUIT ROUGH-IN SHALL BE COORDINATED WITH THE MECHANICAL EQUIPMENT TO AVOID LOCATION CONFLICTS. VERIFY WITH MECHANICAL CONTRACTOR AND COMPLY AS REQUIRED.
14. ALL PANEL DIRECTORIES SHALL BE TYPEWRITTEN NOT HAND WRITTEN.
15. INSTALL AN EQUIPMENT GROUNDING CONDUCTOR IN ALL CONDUITS PER THE SPECIFICATIONS AND NEC. THE EQUIPMENT GROUNDING CONDUCTORS SHALL BE BONDED AT ALL JUNCTION BOXES, PULLBOXES, AND ALL DISCONNECT SWITCHES, STARTERS, AND EQUIPMENT CABINETS.
16. THE CONTRACTOR SHALL PREPARE AS-BUILT DRAWINGS, DOCUMENT ANY AND ALL WIRING AND EQUIPMENT CONDITIONS AND CHANGES WHILE COMPLETING THIS CONTRACT, SUBMIT AT SUBSTANTIAL COMPLETION.
17. ALL DISCONNECT SWITCHES AND OTHER CONTROLLING DEVICES SHALL BE PROVIDED WITH ENGRAVED LAMICOID NAMEPLATES INDICATING EQUIPMENT CONTROLLED, BRANCH CIRCUITS INSTALLED ON, AND PANEL LOCATIONS FED FROM (NO EXCEPTIONS.)
18. PROVIDE CORE DRILLING AS NECESSARY FOR PENETRATIONS OR RISERS THROUGH BUILDING. DO NOT PENETRATE STRUCTURAL MEMBERS WITHOUT CONSTRUCTION MANAGERS APPROVAL. SLEEVES AND/OR PENETRATIONS IN FIRE RATED CONSTRUCTION SHALL BE PACKED WITH FIRE RATED MATERIAL WHICH SHALL MAINTAIN THE FIRE RATING OF THE WALL OR STRUCTURE. FILL FOR FLOOR PENETRATIONS SHALL PREVENT PASSAGE OF WATER, SMOKE, FIRE AND FUMES. ALL MATERIAL SHALL BE UL APPROVED FOR THIS PURPOSE.

    NOTE: ELECTRICAL CHARACTERISTICS OF ALL EQUIPMENT (NEW AND EXISTING) SHALL BE FIELD VERIFIED WITH THE OWNER'S REPRESENTATIVE AND EQUIPMENT SUPPLIER PRIOR TO ROUGH-IN OF CONDUIT AND WIRE. ALL EQUIPMENT SHALL BE PROPERLY CONNECTED ACCORDING TO THE NAMEPLATE DATA FURNISHED ON THE EQUIPMENT (THE DESIGN OF THESE PLANS ARE BASED UPON BEST AVAILABLE INFORMATION AT THE TIME OF DESIGN AND SOME EQUIPMENT CHARACTERISTICS MAY NOT BE CORRECT AS SHOWN ON THESE DRAWINGS). LOCATION OF OUTLETS, BOXES, ETC. AND THE TYPE OF CONNECTION (PLUG OR DIRECT) SHALL BE CONFIRMED WITH THE OWNER'S REPRESENTATIVE PRIOR TO ROUGH-IN.
19. ALL UNDERGROUND CONDUIT ROUTING SHALL BE COORDINATED IN FIELD BETWEEN NEXTEL WIE, CONTRACTOR, AND RESPECTIVE UTILITY COMPANIES.
20. ALL CONDUITS ROUTED BELOW GRADE SHALL TRANSITION TO RIGID GALVANIZED ELBOWS WITH RIGID GALVANIZED STEEL CONDUIT ABOVE GRADE
21. CONTRACTOR SHALL PROVIDE ALL DIRECT BURIED CONDUITS WITH 6" WIDE, 6 MIL THICK ALUMINIZED PLASTIC WARNING TAPE IDENTIFYING CONTENTS. TAPE COLORS SHALL BE ORANGE FOR TELEPHONE AND RED FOR ELECTRIC.
22. ELECTRICAL CONTRACTOR SHALL PROVIDE A SECTION OF SEALTITE CONDUIT FOR TELCO CONNECTION TO THE PRIMARY RADIO CABINET. COORDINATE EXACT CONNECTION TYPE WITH LUCENT.
23. ELECTRICAL CONTRACTOR SHALL PROVIDE A SECTION OF SEALTITE CONDUIT FOR POWER CONNECTION TO THE PRIMARY RADIO CABINET. THE CONTRACTOR SHALL PROVIDE AN ADDITIONAL 6'-0" COIL OF WIRE AT THE END OF THE SEALTITE.
24. GROUND IN ACCORD W/LOCAL CODE & SHEET E-2.
25. PROVIDE (2) 4" GALVANIZED RIGID STEEL CONDUIT RISER WITH 1/4" NYLON DRAG LINE INCLUDING 90° GRC SWEEP AT POLE (UP TO 20'-0" AFG.) SECURE TO POLE PER UTILITY COMPANY REQUIREMENTS. PRIMARY CABLES BY UTILITY COMPANY

ELECTRICAL SPECIFICATIONS

SECTION 16010 - GENERAL PROVISIONS

A. REQUIREMENTS: FURNISH ALL LABOR, MATERIALS, SERVICE, EQUIPMENT, AND APPLIANCES REQUIRED TO COMPLETE THE INSTALLATION OF THE COMPLETE ELECTRICAL SYSTEM IN ACCORDANCE WITH THE SPECIFICATIONS AND CONTRACT DRAWINGS.

B. REQUIREMENTS OF REGULATORY AGENCIES AND STANDARDS: INSTALLATION, MATERIAL, EQUIPMENT AND WORKMANSHIP SHALL CONFORM TO THE APPLICABLE PROVISIONS OF THE NATIONAL ELECTRICAL CODE (NEC) - APPLICABLE STATE ELECTRIC CODES, THE NATIONAL ELECTRICAL SAFETY CODE (NESC), AND THE TERMS AND THE CONDITIONS OF THE AUTHORITIES HAVING LAWFUL JURISDICTION PERTAINING TO THE WORK REQUIRED. ALL MODIFICATIONS REQUIRED BY THESE CODES, RULES, REGULATIONS, AND AUTHORITIES SHALL BE MADE BY THE CONTRACTOR WITHOUT ADDITIONAL CHARGE TO THE OWNER.

C. UNDERWRITER'S LABORATORIES (UL): ALL MATERIALS, APPLIANCES, EQUIPMENT, OR OR DEVICES SHALL CONFORM TO THE APPLICABLE STANDARDS OF UNDERWRITER'S LABORATORIES, INC. THE LABEL OF, OR LISTING BY, UL, IS REQUIRED.

SECTION 16110 - RACEWAYS, BOXES AND FITTINGS

A. CONDUIT FITTINGS, CONNECTORS AND COUPLINGS, EMT COUPLINGS AND CONNECTORS EITHER STEEL OR MALLEABLE IRON ONLY. "CONCRETE TIGHT" OR "RAIN TIGHT" AND EITHER THE GLAND AND RING COMPRESSION TYPE OR STAINLESS STEEL MULTIPLE POINT LOCKING TYPE. CONNECTORS TO HAVE INSULATED THROATS. EMT FITTINGS USING SET SCREWS OR INDENTATIONS AS A MEANS OF ATTACHMENT ARE NOT PERMITTED.

B. BUSHINGS: INSULATED TYPE, DESIGNED TO PREVENT ABRASION OF WIRES WITHOUT IMPAIRING THE CONTINUITY OF THE CONDUIT GROUNDING SYSTEM. FOR RIGID STEEL CONDUIT, IMC AND RIGID ALUMINUM CONDUIT.

C. CONDUIT INSTALLATIONS: CONDUIT SYSTEMS, EMT, OR RIGID NON-METALLIC CONDUIT UNLESS NOTED. INSTALL CONCEALED CONDUIT AND EMT IN AS DIRECT LINES AS POSSIBLE. INSTALL EXPOSED CONDUITS AND EMT PARALLEL TO OR AT RIGHT ANGLES TO THE LINES OF THE BUILDING. RIGHT ANGLE BENDS IN EXPOSED CONDUIT AND EMT RUNS SHALL BE MADE WITH STANDARD ELBOWS, SCREW JOINTED CONDUIT FITTINGS OR CONDUIT BENT TO RADIUS NO LESS THAN THOSE OF STANDARD ELBOWS.

D. CONDUIT SUPPORTS: PROVIDE SUPPORTS FOR HORIZONTAL CONDUITS AND EMT NOT MORE THAN 8 FEET APART WITH NOT LESS THAN TWO SUPPORTS FOR EACH 10 FOOT STRAIGHT LENGTH AND ONE SUPPORT NEAR EACH ELBOW OR BEND INCLUDING RUNS ABOVE SUSPENDED CEILINGS AND WITHIN 3 FEET OF ALL JUNCTION BOXES, SWITCHES, FITTINGS, ETC. INSTALL ONE HOLE PIPE STRAPS ON CONDUITS 1 INCH OR SMALLER INSTALL INDIVIDUAL PIPE HANGERS FOR CONDUITS LARGER THAN 1 INCH. SPRING STEEL FASTENERS WITH HANGER RODS MAY BE USED IN DRY LOCATIONS IN LIEU OF PIPE STRAPS.

SECTION 16120 - CONDUCTORS

A. WIRES AND CABLES (600 VOLTS): CONFORM TO THE APPLICABLE UL AND ICEA STANDARDS FOR THE USE INTENDED. USE COPPER CONDUCTORS WITH 600 VOLTS INSULATION UNLESS OTHERWISE SPECIFIED OR NOTED ON THE DRAWINGS. USE STRANDED CONDUCTORS FOR NO. 8 OR LARGER WHERE ELSEWHERE SPECIFIED OR NOTED OTHERWISE ON THE DRAWINGS. USE OF ALUMINUM CONDUCTORS WILL NOT BE PERMITTED. INSULATION SHALL BE TYPE THHN/THWN, 75°C, FOR ALL CONDUCTORS, USELESS OTHERWISE SPECIFIED OR NOTED ON THE DRAWINGS.

B. COLOR CODING. PHASE, NEUTRAL, AND GROUND CONDUCTORS COLOR-CODED IN ACCORDANCE WITH NEC. CONNECT ALL CONDUCTORS OF THE SAME COLOR TO THE SAME PHASE CONDUCTOR, COLOR CODING SHALL BE BLACK, RED, BLUE, WHITE (120/208) OR BROWN ORANGE, YELLOW, GRAY (277/480) WITH GREEN FOR ALL GROUND CONDUCTORS.

C. CONNECTORS AND LUGS: FOR COPPER CONDUCTORS NO. 6 AND SMALLER: 3M SCOTCH-LOK OR T & B STA-KON COMPRESSION OR INDENT TYPE CONNECTORS WITH INTEGRAL OR SEPARATE INSULATING CAPS. FOR COPPER CONDUCTORS LARGER THAN NO. 6 SOLDERLESS, INDENT, HEX SCREW OR BOLT TYPE PRESSURE CONNECTORS, PROPERLY TAPED OR INSULATED.

D. SPLICES: (480 VOLTS AND UNDER): : CONDUCTOR LENGTHS SHALL BE CONTINUOUS FROM TERMINATION TO TERMINATION WITHOUT SPLICES UNLESS APPROVED BY THE BUILDING INSPECTOR.

SECTION 16220 - CIRCUIT BREAKERS

A. PROVIDE MOLDED CASE, BOLT-ON , THERMAL MAGNETIC TRIP, SINGLE, TWO OR THREE POLE BRANCH CIRCUIT BREAKERS AS SHOWN ON DRAWINGS. MULTIPLE POLE BREAKERS SHALL BE SINGLE HANDLE, COMMON TRIP. AIC RATING TO MATCH EXISTING OR AS REQUIRED FOR AVAILABLE FAULT CURRENTS.

ELECTRICAL LEGEND

SYMBOLS

- CONDUIT TURNING UP
- CONDUIT TURNING DOWN
- CONDUIT RUN UNDERGROUND
- CONDUIT RUN ABOVE GROUND
- M — METER ON METER/BREAKER UNIT
- 5/8" x 10'-0" COPPER CLAD GROUND ROD
- EXOTHERMIC TYPE CONNECTION
- COMPRESSION TYPE CONNECTION
- G — G — GROUND RING. #2 AWG SOLID TINNED BARE COPPER GROUND CONDUCTOR 6" BELOW FROST LINE AND 24" OFF CONCRETE PLATFORM
- XXX — REPRESENTS DETAIL NUMBER
- XXX — REF. DRAWING NUMBER
- XXX — DETAIL NUMBER

ABBREVIATIONS

ACCA	ANTENNA CABLE COVER ASSEMBLY
AGB	COPPER ANTENNA GROUND BAR
AWG	AMERICAN WIRE GAUGE
BCW	BARE COPPER WIRE
BTS	BASE TRANSMISSION SYSTEM
CIBGE	COAX ISOLATED GROUND BAR EXTERNAL
DWG	DRAWING
EMT	ELECTRICAL METALLIC TUBING
GEN	GENERATOR
GPS	GLOBAL POSITIONING SYSTEM
GR	GROWTH
IGR	INTERIOR GROUND RING (HALO)
LAGB	LOWER ANTENNA COPPER GROUND BAR
MIGB	MASTER ISOLATED GROUND BAR
PCS	PERSONAL COMMUNICATION SYSTEM
PPC	POWER PROTECTION CABINET
PRC	PRIMARY RADIO CABINET
RGS	RIGID GALVANIZED STEEL
RWY	RACEWAY
TYP	TYPICAL
SSLP	NEXTEL SPECTRUM LIMITED PARTNERSHIP
UAGB	UPPER ANTENNA COPPER GROUND BAR
EXIST.	EXISTING
(P)	PROPOSED

SYMBOL LEGEND

- X — SPECIAL WORK NOTE
- EXOTHERMIC CONNECTION
- MECHANICAL CONNECTION
- CABLE GROUNDING KIT

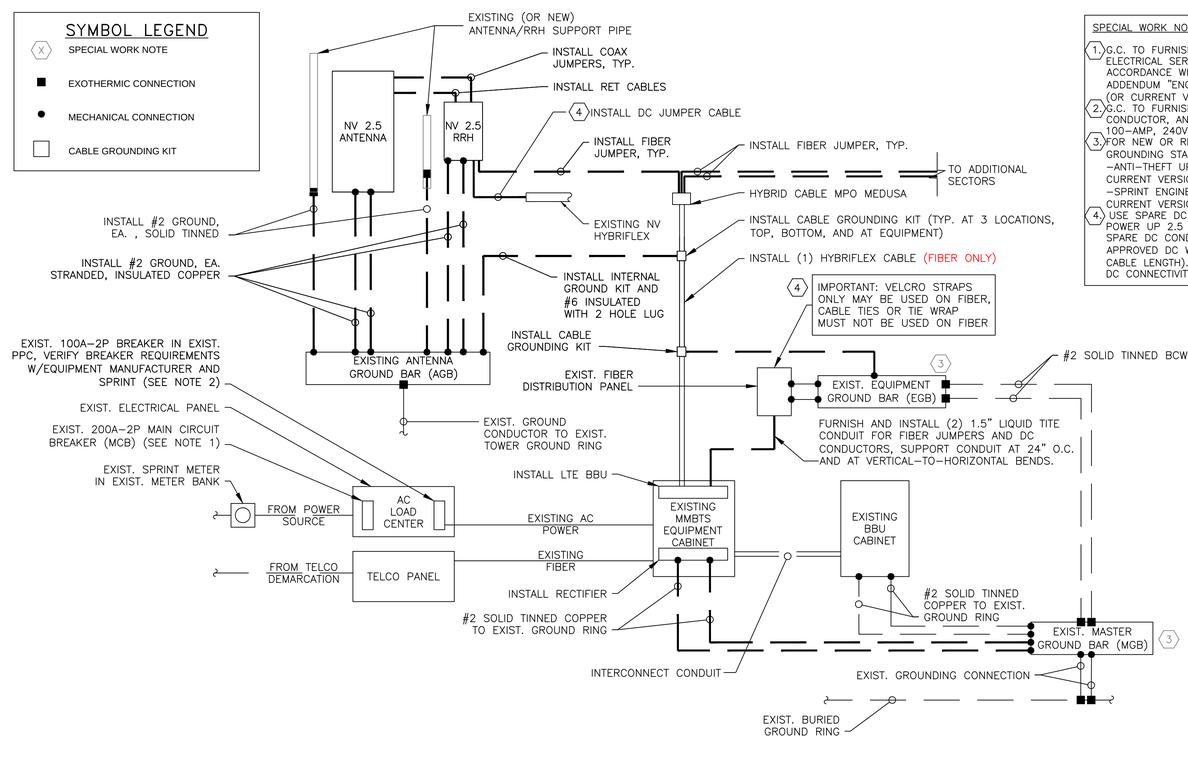

TYPICAL POWER & GROUNDING ONE-LINE (1 / E-1)

SCALE: N.T.S.

SPECIAL WORK NOTE:

1. G.C. TO FURNISH AND INSTALL ALL COMPONENTS TO UPGRADE EXISTING ELECTRICAL SERVICE, CONDUIT, CONDUCTOR, PPC AND MCB IN ACCORDANCE WITH SPRINT CONSTRUCTION STANDARDS NV 2.5 ADDENDUM "ENGINEERING NOTICE 2013-002 (POWER UPGRADES) REV.0" (OR CURRENT VERSION)
2. G.C. TO FURNISH AND INSTALL UPGRADE THE EXISTING MMBTS BREAKER, CONDUCTOR, AND CONDUIT TO A MINIMUM NEC RATING FOR A 100-AMP, 240V CIRCUIT.
3. FOR NEW OR REPAIRED GROUNDING EQUIPMENT, REFER TO SPRINT GROUNDING STANDARDS AND FOLLOWING (SUPPLEMENTS):
   -ANTI-THEFT UPDATE TO SPRINT GROUNDING DATED 08-24-12 (OR CURRENT VERSION)
   -SPRINT ENGINEERING LETTER EL-0504 DATED 04-20-12 (OR CURRENT VERSION)
4. USE SPARE DC CABLES COILED UP AT TOWER TOP NV ARRAY TO POWER UP 2.5 RRH. INSIDE EXISTING FIBER DISTRIBUTION BOX, TIE SPARE DC CONDUCTORS INTO EXISTING DC BREAKER PANEL PER APPROVED DC WIRING CONNECTIVITY OPTION (BASED ON NV HYBRIFLEX CABLE LENGTH). CONSULT WITH SPRINT CM TO DETERMINE APPROPRIATE DC CONNECTIVITY OPTION, PLUMBING DIAGRAM AND DC BREAKER SIZE.

SOURCE: SPRINT SITE AUDIT 09.22.13

EXIST. PPC BREAKER PANEL (2 / E-1)

SCALE: N.T.S.

Sprint VISION
1 INTERNATIONAL BLVD, SUITE 800
MAHWAH, NJ 07495
(201) 684-4000

J LEE ASSOCIATES, LLC
753 FOREST STREET
MARLBOROUGH, MA 01752-3047
PHONE: (800) 825-6460
www.guardian-energy.com

ADVANCED ENGINEERING GROUP, P.C.
Civil Engineering - Site Development
Surveying - Telecommunications
500 NORTH BROADWAY
EAST PROVIDENCE, RI 02914
PH: 401-354-2403
FAX: 401-633-6354

COMMONWEALTH OF MASSACHUSETTS — MARC R. CHRETIEN — CIVIL — No. 40313 — REGISTERED PROFESSIONAL ENGINEER

ENGINEER/LAND SURVEYOR DATE

IT IS A VIOLATION OF LAW FOR ANY PERSON, UNLESS THEY ARE ACTING UNDER THE DIRECTION OF A LICENSED PROFESSIONAL ENGINEER, TO ALTER THIS DOCUMENT.

REVISIONS

REV. #	DATE	DESCRIPTION
1	03/24/14	ISSUED FOR CONSTRUCTION
0	02/07/14	ISSUED FOR REVIEW

PROJECT NO.		SCALE
N/A	DESIGNED BY: MRC DRAWN BY: AAB CHECK'D BY: MRC	AS SHOWN

PROJECT INFORMATION

TAGE INN
BS54XC903

844 McGRATH HIGHWAY
SOMERVILLE, MA 02143

DRAWING TITLE

ONE-LINE DIAGRAM & PPC DETAILS

DRAWING NUMBER

E-1

PROTECTIVE GROUNDING SYSTEMS GENERAL NOTES:

1. GROUNDING SHALL BE IN ACCORDANCE WITH NEC ARTICLE 250–GROUNDING AND BONDING.
2. GROUNDING SHALL BE IN ACCORDANCE WITH SPRINT SSEO DOCUMENTS 3.018.02.004 "BONDING, GROUNDING AND TRANSIENT PROTECTION FOR CELL SITES" AND 3.018.10.002 "SITE RESISTANCE TO EARTH TESTING".
3. PROVIDE GROUND CONNECTIONS FOR ALL METALLIC STRUCTURES, ENCLOSURES, RACEWAYS AND OTHER CONDUCTIVE ITEMS ASSOCIATED WITH THE INSTALLATION OF CARRIER'S EQUIPMENT.
4. GROUND CONNECTIONS: CLEAN SURFACES THOROUGHLY BEFORE APPLYING GROUND LUGS OR CLAMPS. IF SURFACE IS COATED, REMOVE THE COATING, APPLY A NON–CORROSIVE APPROVED COMPOUND TO CLEAN SURFACE AND INSTALL LUGS OR CLAMPS. WHERE GALVANIZING IS REMOVED FROM METAL, IT SHALL BE PAINTED OR TOUCHED UP WITH "GALVAMOX" OR EQUAL.
5. ALL GROUNDING WIRES SHALL PROVIDE A STRAIGHT, DOWNWARD PATH TO GROUND WITH GRADUAL BENDS AS REQUIRED. GROUND WIRES SHALL NOT BE LOOPED OR SHARPLY BENT.
6. ALL CLAMPS AND SUPPORTS USED TO SUPPORT THE GROUNDING SYSTEM CONDUCTORS AND PVC CONDUITS SHALL BE PVC TYPE (NON CONDUCTIVE). DO NOT USE METAL BRACKETS OR SUPPORTS WHICH WOULD FORM A COMPLETE RING AROUND ANY GROUNDING CONDUCTOR.
7. ALL GROUND WIRES SHALL BE #2 SOLID TINNED BCW UNLESS NOTED OTHERWISE.
8. PROVIDE DEDICATED #2 AWG COPPER GROUND WIRE FROM EACH ANTENNA MOUNTING PIPE TO ASSOCIATED CIGBE.
9. GROUND ANTENNA BASES, FRAMES, CABLE RACKS, AND OTHER METALLIC COMPONENTS WITH #2 INSULATED TINNED STRANDED COPPER GROUNDING CONDUCTORS AND CONNECT TO INSULATED SURFACE MOUNTED GROUND BARS. CONNECTION DETAILS SHALL FOLLOW MANUFACTURER'S SPECIFICATIONS FOR GROUNDING.
10. EACH EQUIPMENT CABINET SHALL BE CONNECTED TO THE MASTER ISOLATION GROUND BAR (MGB) WITH #2 SOLID TINNED BCW EQUIPMENT CABINETS WALL HAVE (2) CONNECTIONS.
11. GROUND HYBRIFLEX SHIELD AT TOP, BOTTOM AND AT TRANSITION TO HYBRIFLEX JUMPER CABLES AT EQUIPMENT CABINET ENTRANCE USING MANUFACTURER'S GUIDELINES. WHEN HYBRIFLEX CABLE EXCEEDS 200', GROUND AT INTERVALS NOT EXCEEDING 100'.
12. THE CONTRACTOR SHALL VERIFY THAT THE EXISTING GROUND BARS HAVE ENOUGH SPACE/HOLES FOR ADDITIONAL TWO HOLE LUGS.
13. EXOTHERMIC WELDING IS RECOMMENDED FOR GROUNDING CONNECTION WHERE PRACTICAL OTHERWISE. THE CONNECTION SHALL BE MADE USING COMPRESSION TYPE–2 HOLES, LONG BARREL LUGS OR DOUBLE CRIMP "C" CLAMP. THE COPPER CABLES SHALL BE COATED WITH AN ANTI–OXIDANT (THOMAS BETTS KOPR–SHILD) BEFORE MAKING THE CRIMP CONNECTIONS THE CONTRACTOR SHALL FOLLOW MANUFACTURER'S RECOMMENDED TORQUES ON THE BOLT ASSEMBLY TO SECURE CONNECTIONS.
14. AT ALL TERMINATIONS AT EQUIPMENT ENCLOSURES, PANEL, AND FRAMES OF EQUIPMENT AND WHERE EXPOSED FOR GROUNDING. CONDUCTOR TERMINATION SHALL BE PERFORMED UTILIZING TWO HOLE BOLTED TONGUE COMPRESSION TYPE LUGS WITH STAINLESS STEEL SELF–TAPPING SCREWS.
15. THE MASTER GROUND BAR (MGB) SHALL BE MADE OF BARE 1/4"x2" COPPER (FOR OUTDOOR APPLICATIONS IT SHALL BE TINNED COPPER) AND LARGE ENOUGH TO ACCOMMODATE THE REQUIRED NUMBER OF GROUND CONNECTIONS. THE HARDWARE SECURING THE MGB SHALL ELECTRICAL INSULATE THE MGB FROM ANY STRUCTURE TO WHICH IT IS FASTENED.
16. ALL BOLTS, WASHERS, AND NUTS USED ON GROUNDING CONNECTIONS SHALL BE STAINLESS STEEL.
17. ALL GROUNDING CONNECTIONS SHALL BE COATED WITH A COPPER SHIELD ANTI–CORROSIVE AGENT SUCH AS T&B KOPR SHIELD. VERIFY PRODUCT WITH SPRINT CONSTRUCTION MANAGER.
18. FOR NEW OR REPAIRED GROUNDING EQUIPMENT. REFER TO SPRINT GROUNDING STANDARDS AND FOLLOWING (SUPPLEMENTS):
    –ANTI–THEFT UPDATE TO SPRINT GROUNDING DATED 08–24–12
    –SPRINT ENGINEERING LETTER EL–0504 DATED 04–20–12

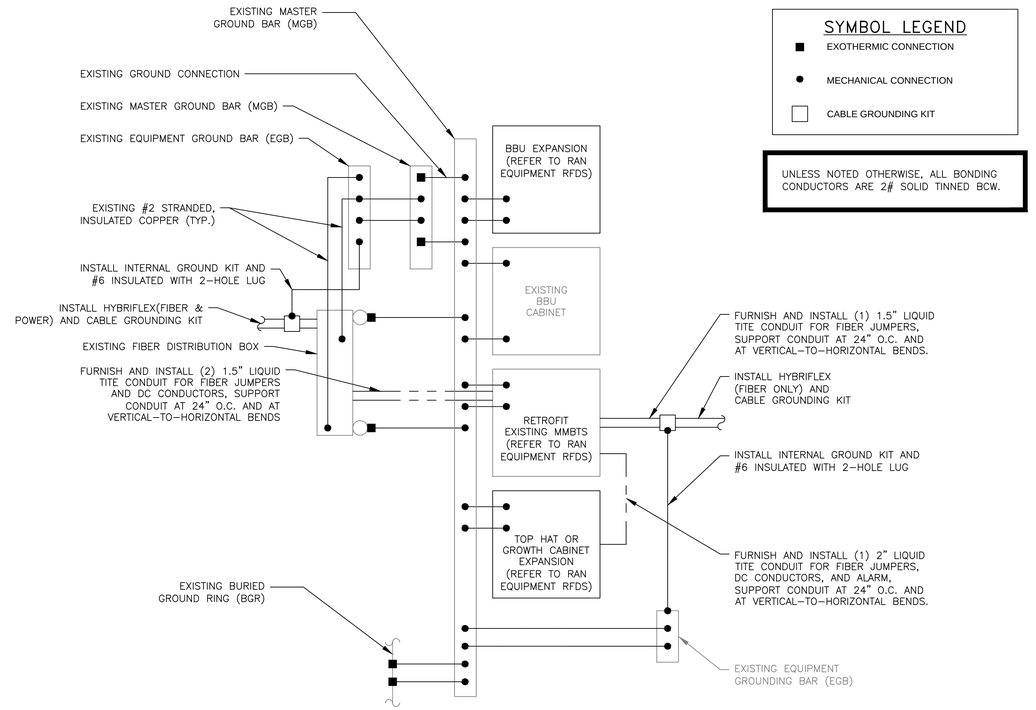

SYMBOL LEGEND

- ■ EXOTHERMIC CONNECTION
- ● MECHANICAL CONNECTION
- □ CABLE GROUNDING KIT

UNLESS NOTED OTHERWISE, ALL BONDING CONDUCTORS ARE 2# SOLID TINNED BCW.

NOTE: HYBRIFLEX (FIBER & POWER) AND HYBRIFLEX (FIBER–ONLY) SHOWN. REFER TO RAN EQUIPMENT RFDS FOR SITE–SPECIFIC SCENARIO.

2.5 RAN EQUIPMENT GROUNDING SCHEMATIC (1 / E–2)

SCALE: N.T.S.

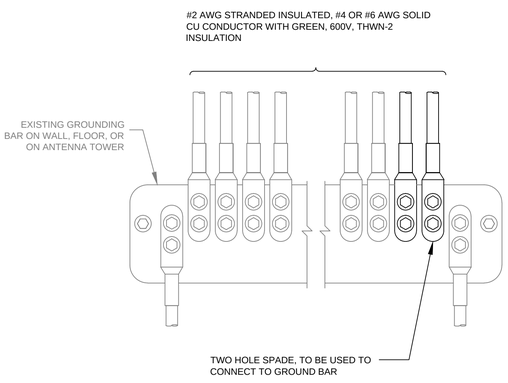

NOTES

1. APPLY NO-OX TO LUG AND BAR CONTACT SURFACE. DO NOT COAT INLINE LUG.
2. IF STOLEN GROUND BARS ARE ENCOUNTERED, CONTACT SPRINT CM FOR REPLACEMENT THREADED ROD KIT.

INSTALLATION OF GROUNDING CONDUCTOR TO GROUNDING BAR (2 / E–2)

SCALE: N.T.S.

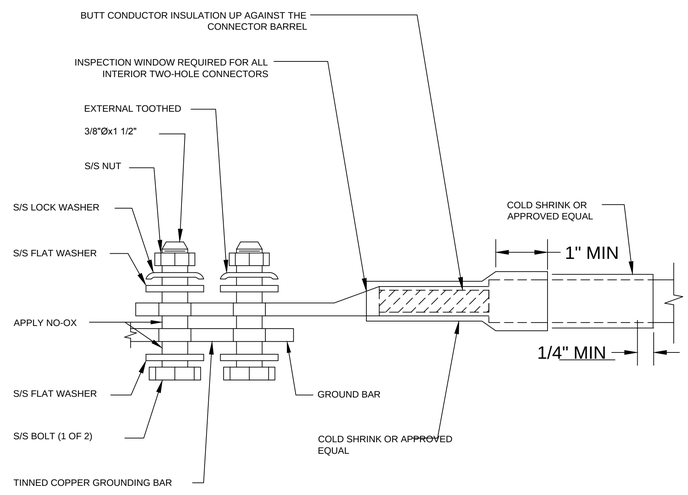

TWO HOLE LUG (3 / E–2)

SCALE: N.T.S.

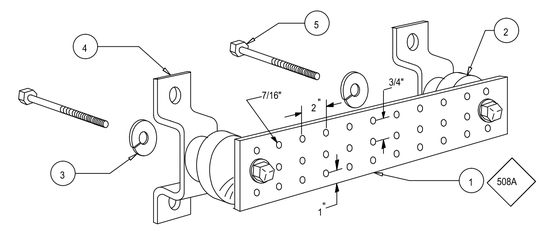

LEGEND

1- TINNED COPPER GROUND BAR, "X 4"X 20", NEWTON INSTRUMENT CO. CAT. NO. B-6142, HOLE CENTERS TO MATCH NEMA DOUBLE LUG CONFIGURATION
2- INSULATORS, NEWTON INSTRUMENT CAT. NO. 3061-4
3- 5/8" LOCKWASHERS, NEWTON INSTRUMENT CO. CAT. NO. 3015-8
4- WALL MOUNTING BRACKET, NEWTON INSTRUMENT CO. CAT NO. A-6056
5- 5/8-11 X 1" H.H.C.S.BOLTS, NEWTON INSTRUMENT CO. CAT NO. 3012-1

GROUND BAR (4 / E–2)

SCALE: N.T.S.

Sprint VISION
1 INTERNATIONAL BLVD, SUITE 800
MAHWAH, NJ 07495
(201) 684-4000

J LEE ASSOCIATES, LLC
753 FOREST STREET
MARLBOROUGH, MA 01752-3047
PHONE: (800) 825-6460
www.guardian-energy.com

ADVANCED ENGINEERING GROUP, P.C.
Civil Engineering - Site Development
Surveying - Telecommunications
500 NORTH BROADWAY
EAST PROVIDENCE, RI 02914
PH: 401–354–2403
FAX: 401–633–6354

COMMONWEALTH OF MASSACHUSETTS
MARC R. CHRETIEN
CIVIL
No. 40313
REGISTERED PROFESSIONAL ENGINEER

ENGINEER/LAND SURVEYOR | DATE

IT IS A VIOLATION OF LAW FOR ANY PERSON, UNLESS THEY ARE ACTING UNDER THE DIRECTION OF A LICENSED PROFESSIONAL ENGINEER, TO ALTER THIS DOCUMENT.

REVISIONS

REV. #	DATE	DESCRIPTION
1	03/24/14	ISSUED FOR CONSTRUCTION
0	02/07/14	ISSUED FOR REVIEW

PROJECT NO.		SCALE
N/A	DESIGNED BY: MRC DRAWN BY: AAB CHECK'D BY: MRC	AS SHOWN

PROJECT INFORMATION

TAGE INN
BS54XC903

844 McGRATH HIGHWAY
SOMERVILLE, MA 02143

DRAWING TITLE

GROUNDING DETAILS & NOTES

DRAWING NUMBER

E-2