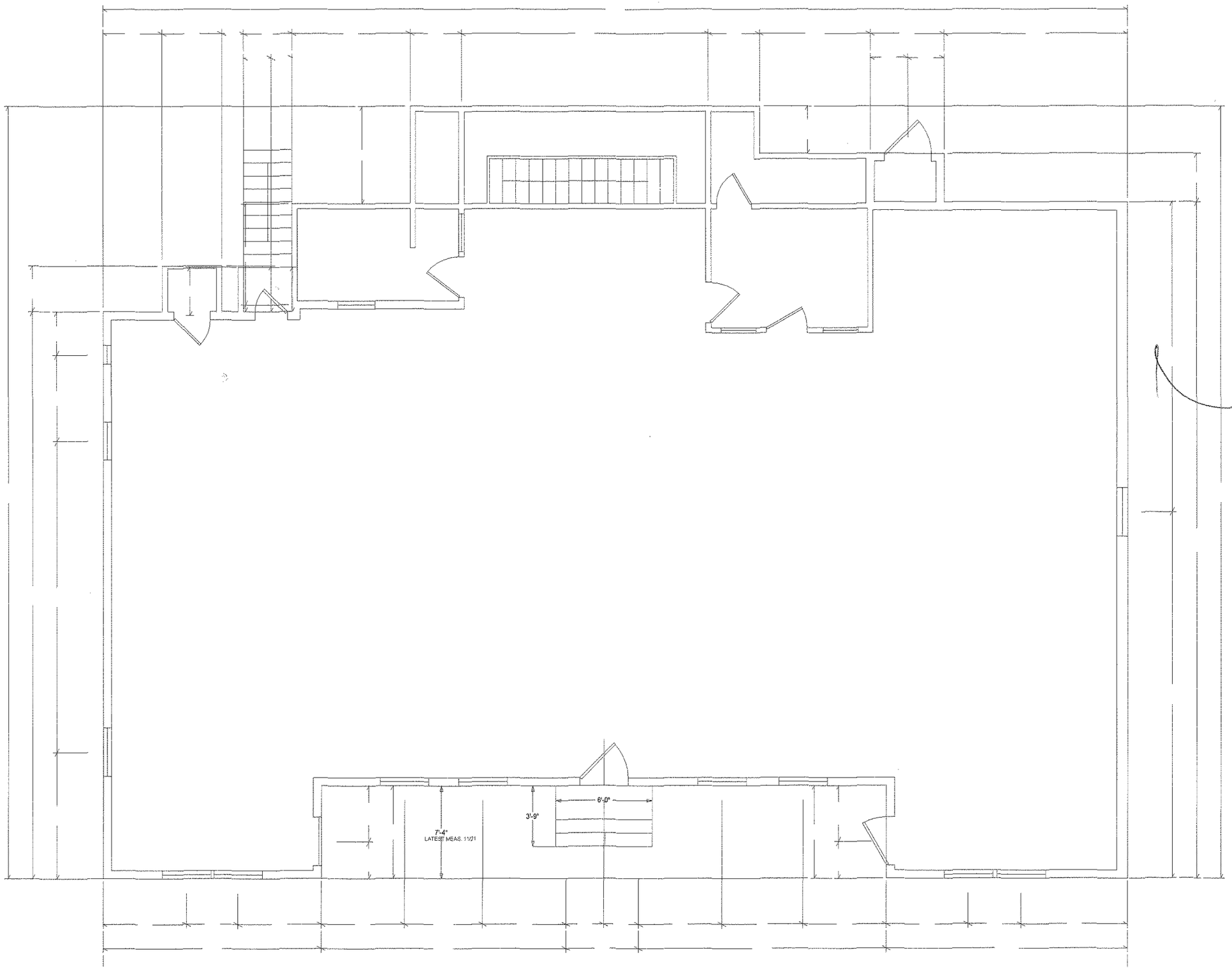

7/7/12

ADE
DESIGNERS & ENGINEERS
[illegible]
[illegible]
TEL: 617-838-2445

STAMP:

COMMONWEALTH OF MASSACHUSETTS
HAMID ATTARHA
No. 34696
REGISTERED PROFESSIONAL ENGINEER

PROJECT:

No. 86
HIGHLAND AVE.
APARTMENTS

LOCATION:

NO. 86 HIGHLAND AVE.
SOMERVILLE, MA

DRAWING:

PROPOSED
ENTRANCE

REVISIONS: 7/6/12

SCALE:	AS SHOWN
DATE:	11/21/08
DRAWN BY:	MA
CHECKED BY:	X
PROJECT NO:	R082555
SHEET NO:	

F-1

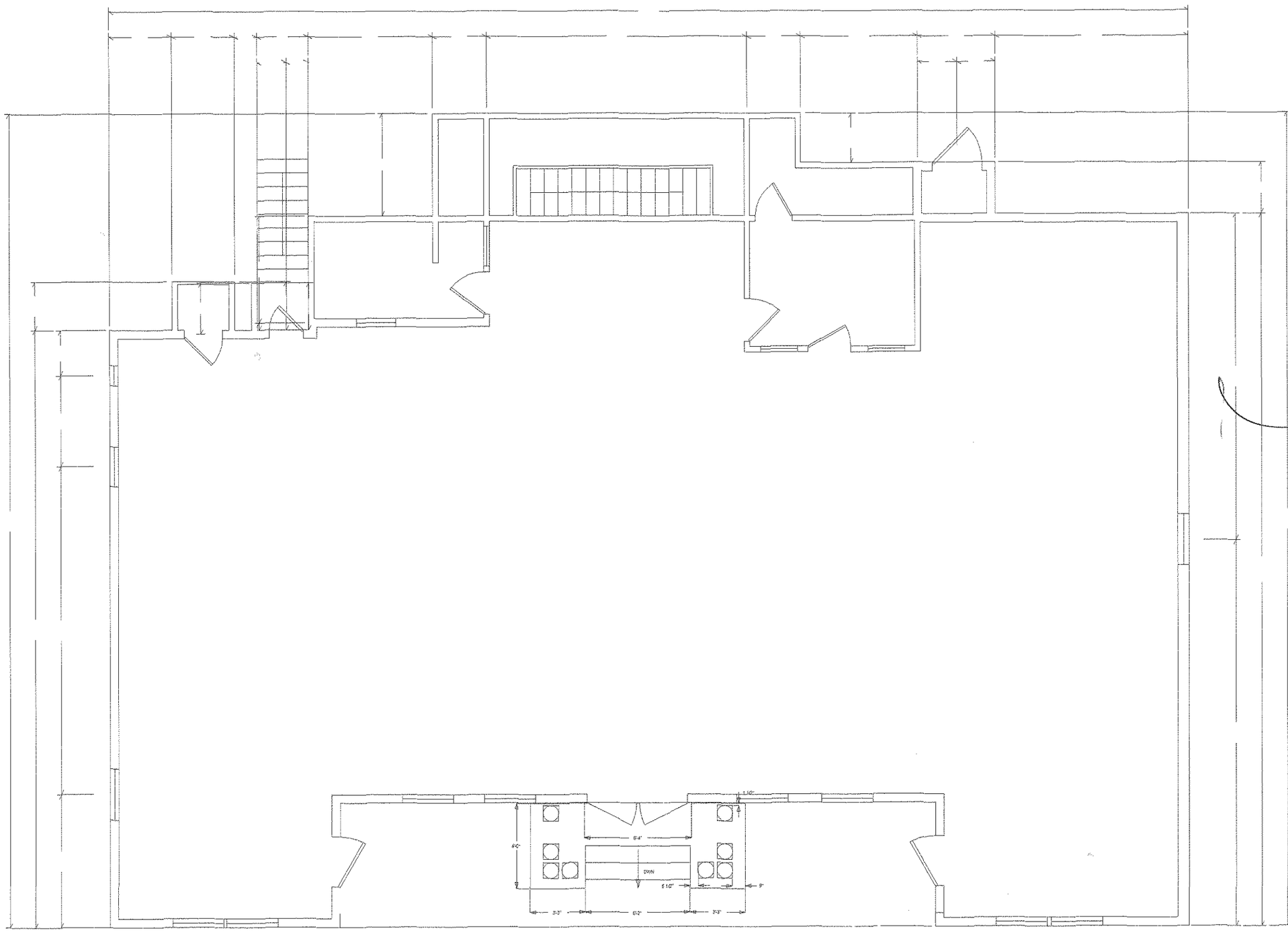

7/7/12

ADE
DESIGNERS & ENGINEERS

COMMONWEALTH OF MASSACHUSETTS
HAMID ATTARHA
No. 34696
REGISTERED PROFESSIONAL ENGINEER

No. 86
HIGHLAND AVE.
APARTMENTS

LOCATION:
NO. 86 HIGHLAND AVE.
SOMERVILLE, MA

DRAWING:
PROPOSED ENTRANCE

REVISIONS: 7/6/12

SCALE:	AS SHOWN
DATE:	11/21/08
DRAWN BY:	MA
CHECKED BY:	X
PROJECT NO:	R082555
SHEET NO:	

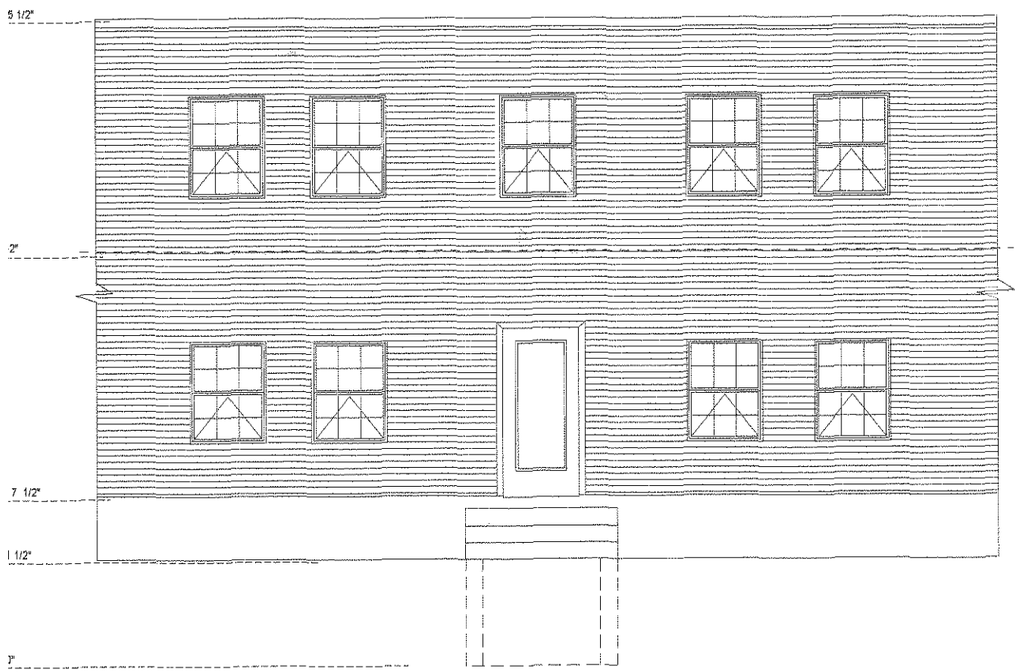

EXIST ELEV.

N.T.S.

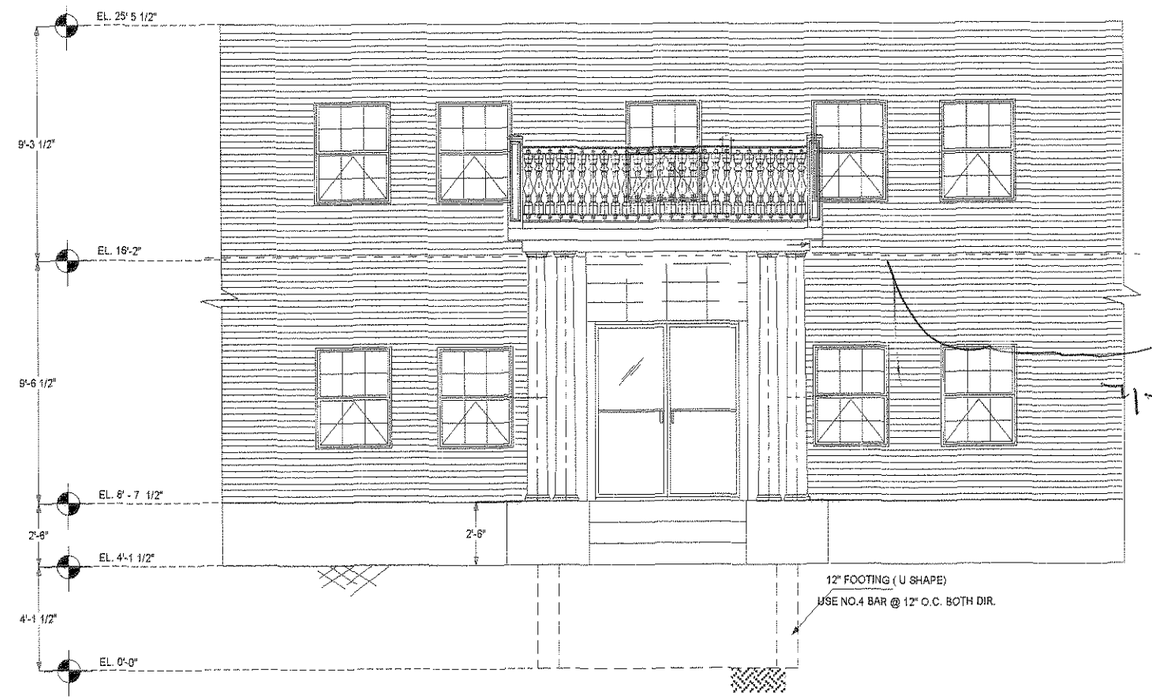

PROP. ELEV.

N.T.S.

ADE
DESIGNERS & ENGINEERS

COMMONWEALTH OF MASSACHUSETTS
HAMID ATTARHA
No. 34696
REGISTERED PROFESSIONAL ENGINEER

PROJECT:
No. 86 HIGHLAND AVE. APARTMENTS

LOCATION:
NO. 86 HIGHLAND AVE. SOMERVILLE, MA

DRAWING:
PROPOSED ENTRANCE

REVISIONS:

SCALE:	AS SHOWN
DATE:	7/6/12
DRAWN BY:	MA
CHECKED BY:	X
PROJECT NO:	R082555
SHEET NO:	

NOTES

L A BUILDING PERMIT HAS BEEN OBTAINED.
NCE WITH THE STATE OF MASSACHUSETTS CODES.

ND MATERIALS FOR A PERIOD OF ONE YEAR. THE
BLE FOR REPAIRING AND/OR REPLACING HIS OWN
PAY ALL COSTS INCIDENTAL THERETO INCLUDING
SHINGS AND/OR EQUIPMENT.

ED. ALL WORK SHALL BE LAID OUT BY DIMENSIONS.
GHT TO THE ATTENTION OF THE OWNER IMMEDIATLY.
CTED BY THE CONTRACTOR BEFORE HE BEGINS HIS

RMED IN SUCH A MANNER AS TO PROTECT WORKMEN
RY & ADJACENT PROPERTY FROM DAMAGE.
ACE WITH THE PROJECT SPECIFICATIONS.
F THE ARCHITECT AND SHAL NOT BE COPIED OR

LATION SHALL BE INSTALLED IN ACCORDANCE WITH MA
GULATIONS.

E ALL WORK FOR WHITCH MATERIALS ARE FURNISHED.
ALL FACTORY ASSEMBLED EQUIPMENT FOR WHITCH
GYARANTEE IS FURNISHED AND ALL WORK IN
NY MANUFACTURER'S GUARANTEED EQUIPMENT. THIS
IST FOR A PERIOD OF ONE YEAR OF FINAL
SHALL APPLY TO DEFECTS IN THE MATERIAL AND

QUIREMENTS WITH THE MANUFACTURER'S DATA.
NCE WITH THE PROJECT'S SPECIFICATIONS.

RMED BY A LICENSED PLUMBER AND SHALL CONFORM
ES, RULES AND REGULATIONS.

ATIONS SHALL BE DETERMINED BY THE PLUMBING

ETERMINED BY THE PLUMBING CONTRACTOR.
IPES TO FIXTURES AHEAD OF THE OPERATING LEVERS

QUIRMENTS WITH THE MANUFACTURER'S DATA.
ANCE WITH THE PROJECT SPECIFICATIONS.

CALCULATIONS AND PERMIT

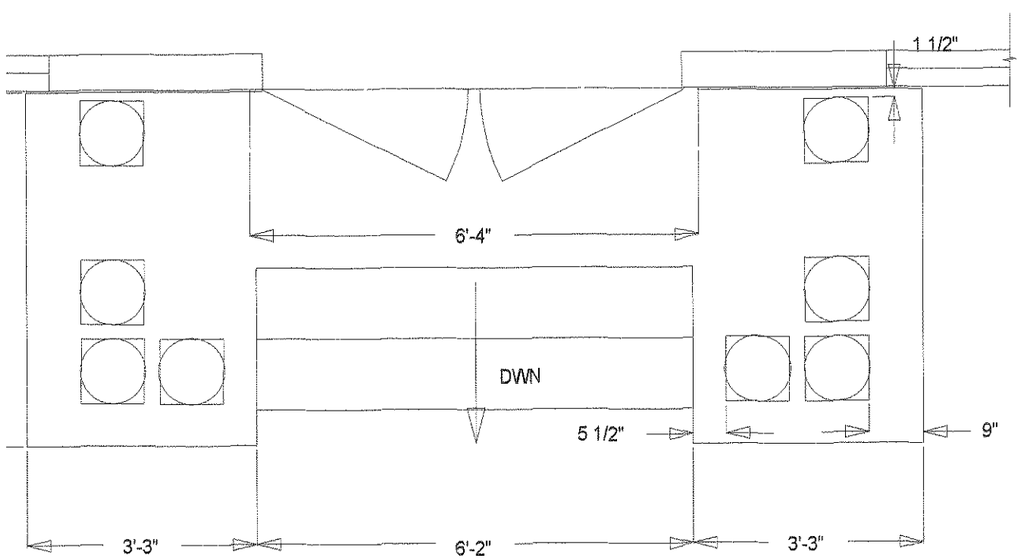

FRONT PLAN (NO.4)

N.T.S.

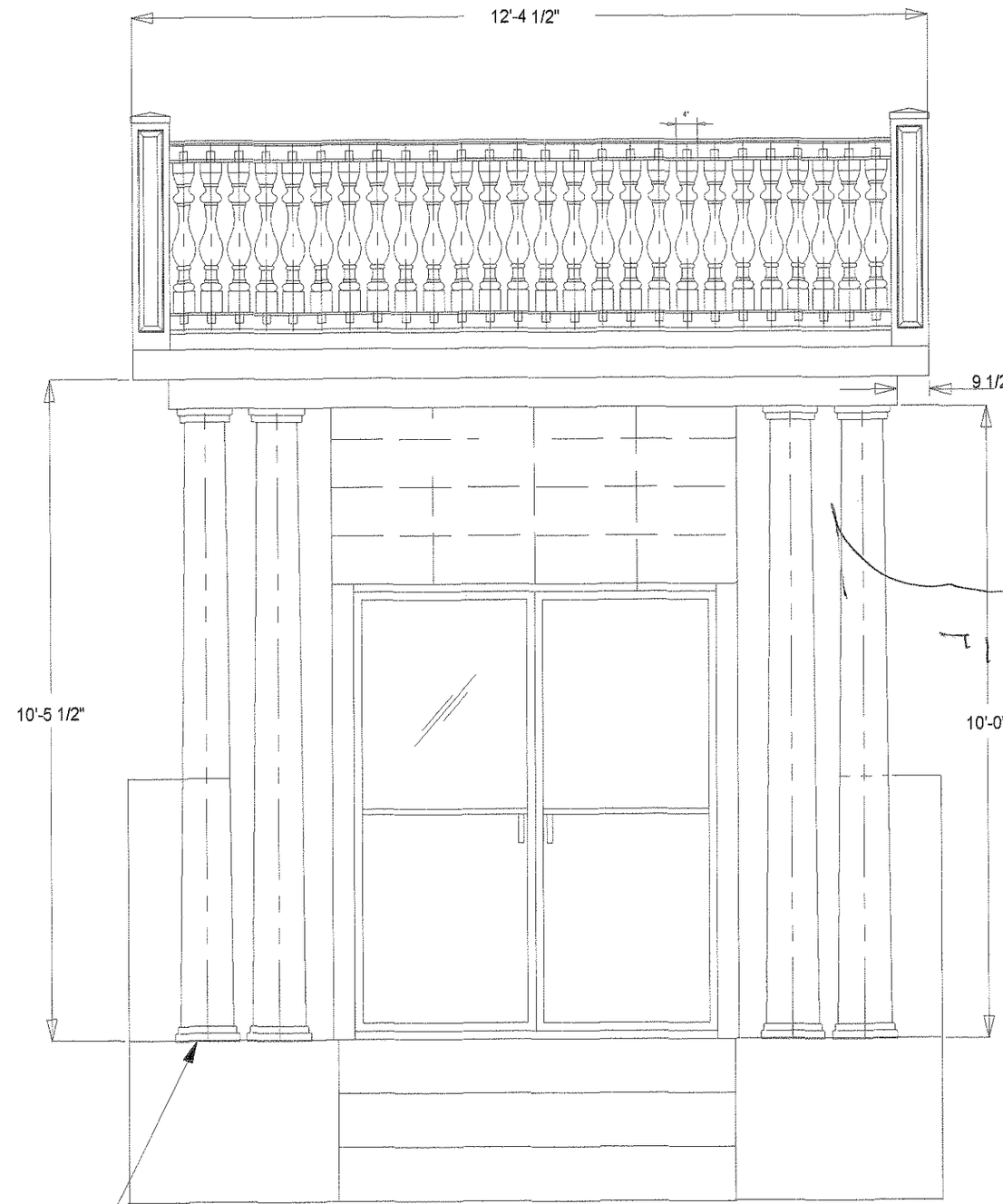

FRONT PROFILE (NO.4)

ADE
DESIGNERS & ENGINEERS
102 HOWARD STREET SUITE H
EASTON, MA 02375
TEL: 617-838-2445

STAMP:

COMMONWEALTH OF MASSACHUSETTS
HAMID ATTARHA
No. 34696
REGISTERED PROFESSIONAL ENGINEER

PROJECT:
No. 86 HIGHLAND APARTMENTS

LOCATION:
No. 86 HIGHLAND AVE. SOMERVILLE, MA

DRAWING:
PROPOSED ENTRANCE

REVISIONS: 7/9/12

SCALE:	AS SHOWN
DATE:	11/30/11
DRAWN BY:	MA
CHECKED BY:	X
PROJECT NO:	R082555
SHEET NO:	A 1

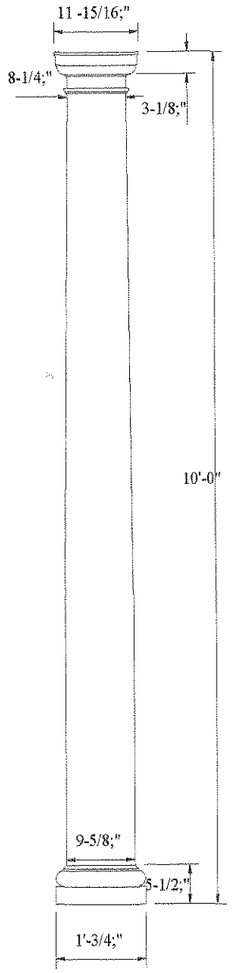

COLUMN DETAIL

N.T.S.

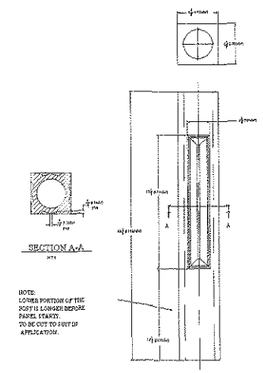

POST

N.T.S.

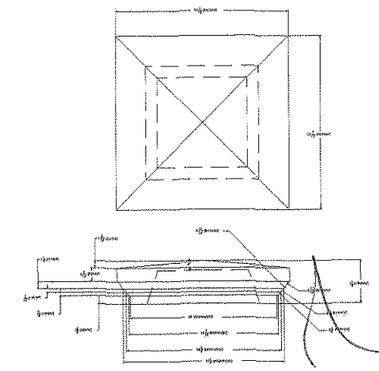

N. CAP

N.T.S.

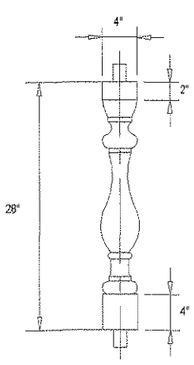

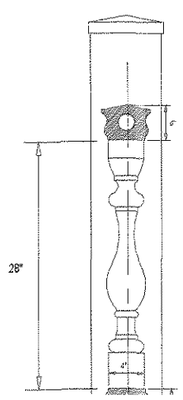

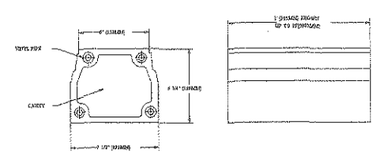

DWG TITLE: BOTTOM RAIL

N.T.S.

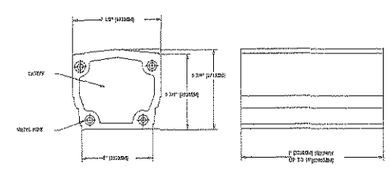

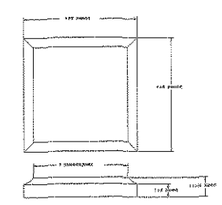

CAP

N.T.S.

ADE
DESIGNERS & ENGINEERS

COMMONWEALTH OF MASSACHUSETTS
HAMID ATTARHA
No. 34696
REGISTERED PROFESSIONAL ENGINEER

7/7/12

PROJECT:

No. 86 HIGHLAND APARTMENTS

LOCATION:

No. 86 HIGHLAND AVE. SOMERVILLE, MA

DRAWING:

ARCHITECTURAL DETAILS

REVISIONS: 7/5/12

SCALE:	AS SHOWN
DATE:	11/20/08
DRAWN BY:	SA
CHECKED BY:	X
PROJECT NO:	1082003
SHEET NO:	

ACCORDANCE WITH THE CODE
PECIFICATIONS LIST BELOW;
, BUILDING CODE.
EL CONSTRUCTION, ALLOWABLE STRESS
ITION
ING CODE
REQUIREMENTS FOR STRUCTURAL CONCRETE, ACI 318-2

RESS DESIGN METHOD IN ACCORDANCE WITH
F AISC, MANUAL OF STEEL CONSTRUCTION IS USED FOR
L MEMBERS,. LOAD FACTOR DESIGN METHOD IN ACCOR
IREMENTS OF ACI 318-02 IS USED FOR CONCRETE ELEMENTS.

R: 40 PSF
30 PSF.
HABITABLE): 20 PSF.
W LOAD): 30 PSF.

H.

THE PLANS ARE NOT APPLICABLE TO REDUCED SIZE PRINTS.

SHALL BE SET BY TEMPLATE BEFORE THE CONCRETE IS PLACED.

. SHALL CONFIRM TO THE REQUIREMENTS OF ASTM A615, GRADE 60.

TEEL SHALL BE FY=36 KSI FOR THE BEAMS & PLATES
THE COLUMNS.
ON SHALL BE IN ACCORDANCE WITH THE WELDING CODE ANSI/AWSD1.5
3/4" DIAMETER OF 1/2" DIAMETER AND CONFORM TO THE
ASTM DESIGNATION A325 , UNLESS OTHERWISE NOTED.

IPRESIVE STRENGHT SHALL BE MINIMUM OF 3000 PSI

Y OF THE SOIL MUST BE MINIMUM OF 5.0 KSF.

N. FB=1200 PSI & VH =95 PSI.
MBER W/ MIN. FB=2850 PSI & MINIMUM VH=285 PSI.

S RESPONSIBLE FOR THE STABILITY OF THE STRUCTURE
TION.

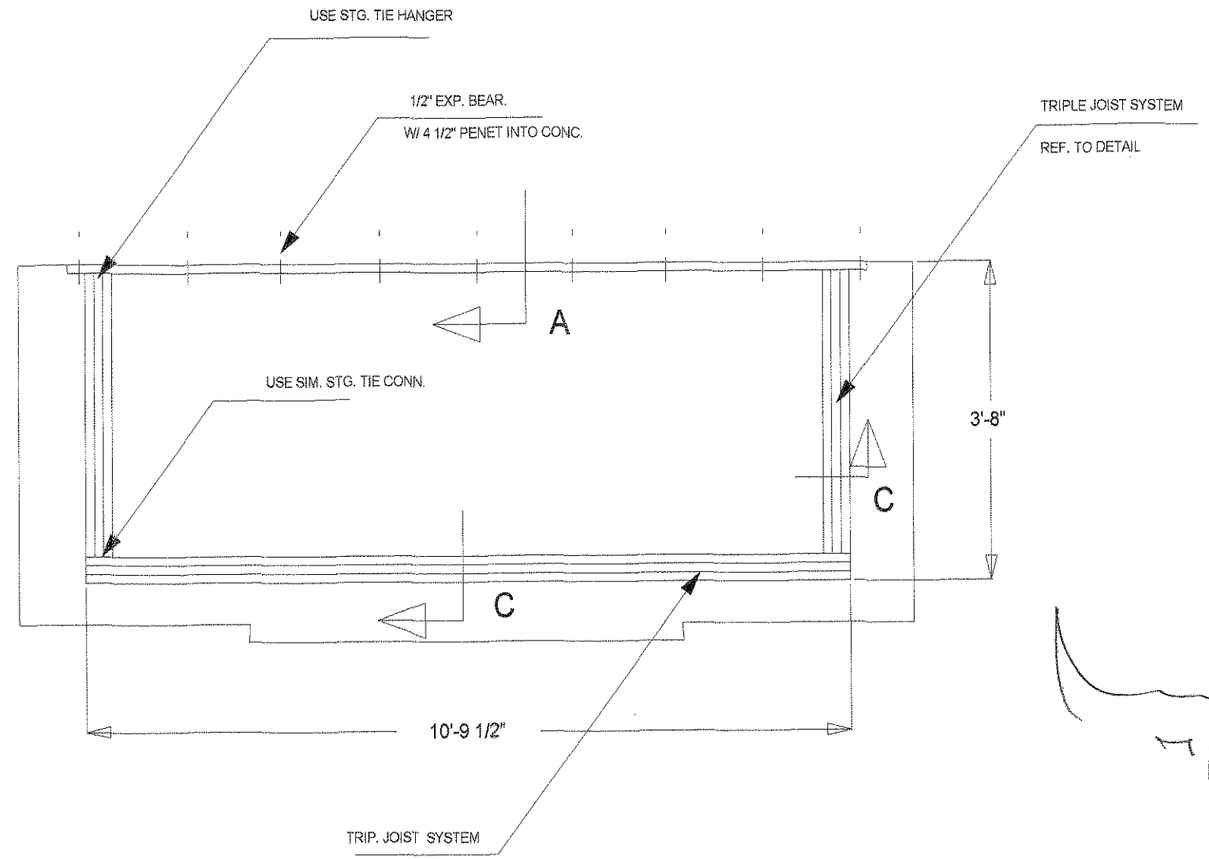

LOWER FRAMING
N.T.S.

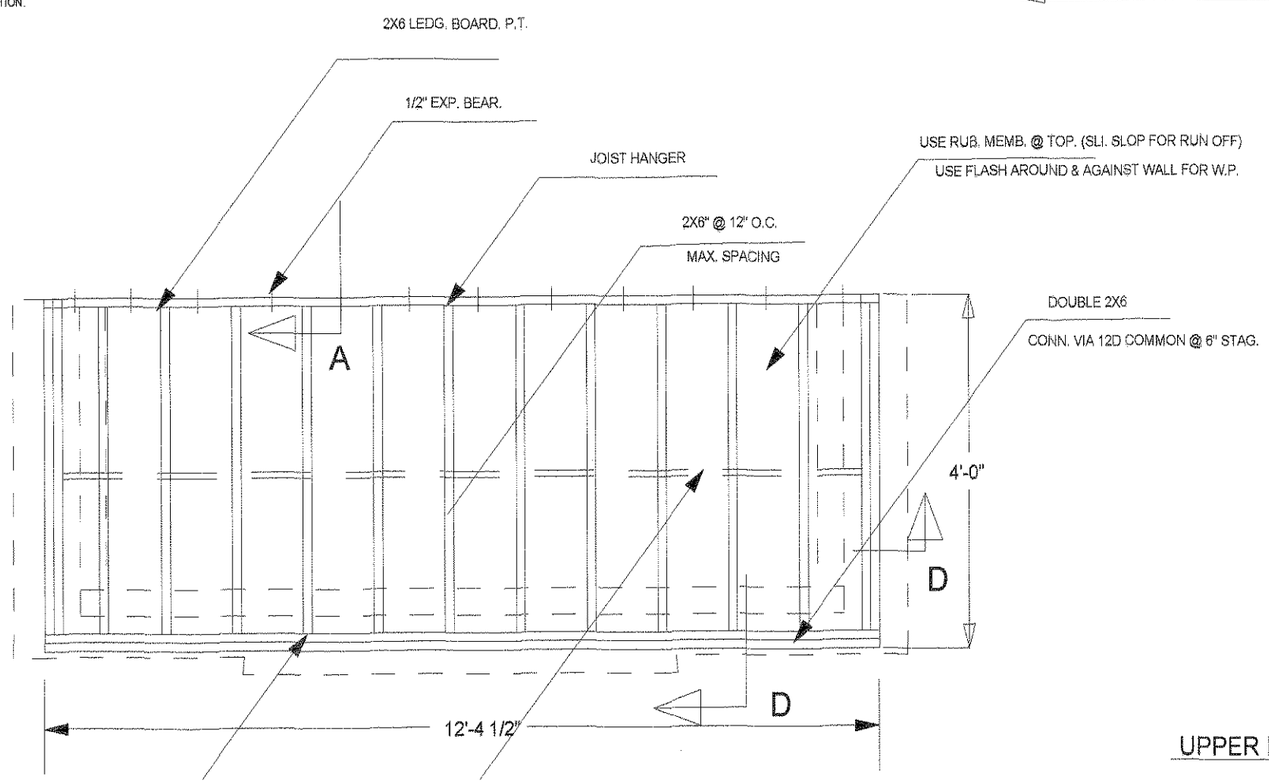

UPPER FRAM. (JOIST SYSTEM)
N.T.S.

7/7/12

COMMONWEALTH OF MASSACHUSETTS
HAMID ATTARHA
No. 34696
REGISTERED PROFESSIONAL ENGINEER

ADE
DESIGNERS & ENGINEERS
ESSEX NO. 24 KEEN SUITE #1
EVERETT, MA 02149
TEL: 617-535-2440

PROJECT:
No. 86 HIGHLAND APARTMENTS

LOCATION:
No. 86 HIGHLAND AVE.
SOMERVILLE, MA

DRAWING:
FRAMING REPAIR DETAILS

REVISIONS: 7/9/12

SCALE: AS SHOWN
DATE:
DRAWN BY: HA
CHECKED BY: X
PROJECT NO: K082005
SHEET NO:

ACCORDANCE WITH THE CODE
PECIFICATIONS LIST BELOW:
. BUILDING CODE.
EL CONSTRUCTION, ALLOWABLE STRESS
)ITION
ING CODE
: REQUIREMENTS FOR STRUCTURAL CONCRETE, ACI 318-2

RESS DESIGN METHOD IN ACCORDANCE WITH
F AISC, MANUAL OF STEEL CONSTRUCTION IS USED FOR
L MEMBERS,. LOAD FACTOR DESIGN METHOD IN ACCOR
IREMENTS OF ACI 318-02 IS USED FOR CONCRETE ELEMENTS.

R: 40 PSF
: 30 PSF.
NHABITABLE): 20 PSF.
/ LOAD): 30 PSF.
PH.

THE PLANS ARE NOT APPLICABLE TO REDUCED SIZE PRINTS.

SHALL BE SET BY TEMPLATE BEFORE THE CONCRETE IS PLACED.

L SHALL CONFIRM TO THE REQUIREMENTS OF ASTM A615, GRADE 60.

TEEL SHALL BE FY=36 KSI FOR THE BEAMS & PLATES
THE COLUMNS.
ON SHALL BE IN ACCORDANCE WITH THE WELDING CODE ANSI/AWSD1.5
: 3/4" DIAMETER OF 1/2" DIAMETER AND CONFORM TO THE
ASTM DESIGNATION A325 , UNLESS OTHERWISE NOTED.

IPRESIVE STRENGHT SHALL BE MINIMUM OF 3000 PSI

Y OF THE SOIL MUST BE MINIMUM OF 5.0 KSF.

N. FB=1200 PSI & VH =95 PSI.
MBER W/ MIN. FB=2850 PSI & MINIMUM VH=285 PSI.

S RESPONSIBLE FOR THE STABILITY OF THE STRUCTURE
TION.

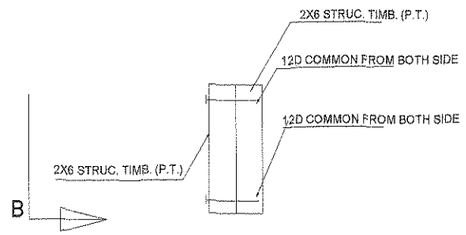

SECTION D-D
NTS

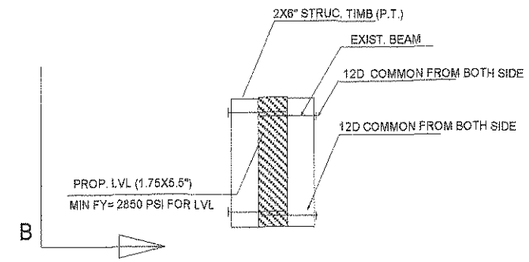

SECTION C-C
NTS

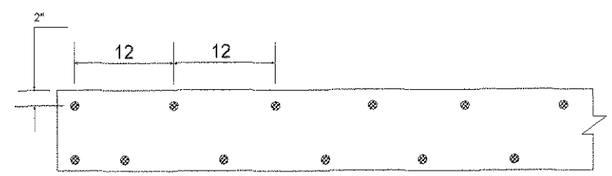

SECTION B-B
NTS

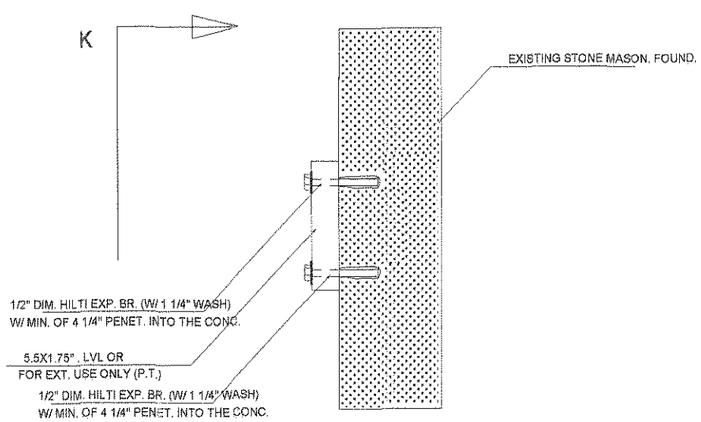

SECTION X-X
NTS

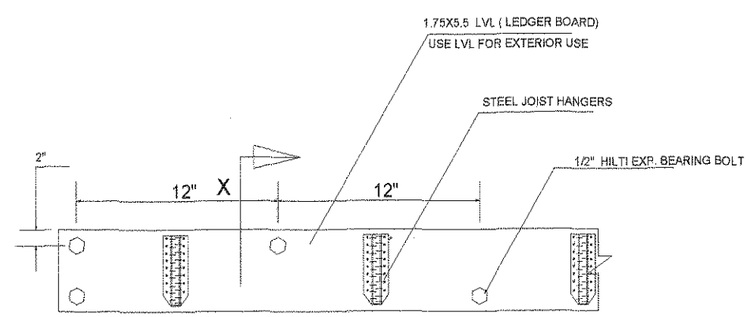

SECTION K-K
NTS

ADE
DESIGNERS & ENGINEERS

COMMONWEALTH OF MASSACHUSETTS
HAMID ATTARHA
No. 34696
REGISTERED PROFESSIONAL ENGINEER

PROJECT:
No. 86 HIGHLAND APARTMENTS

LOCATION:
No. 86 HIGHLAND AVE.
SOMERVILLE, MA

DRAWING:
FRAMING REPAIR DETAILS

REVISIONS: 7/5/12

SCALE:	AS SHOWN
DATE:	11/30/11
DRAWN BY:	MA
CHECKED BY:	X
PROJECT NO:	R082555
SHEET NO:	

Beam to Beam Connection

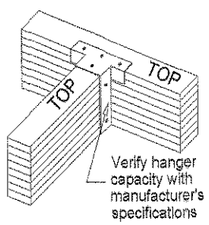

Beam to Beam Connection

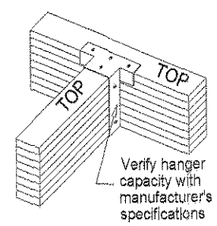

Beam Depth Change at Intermediate Support

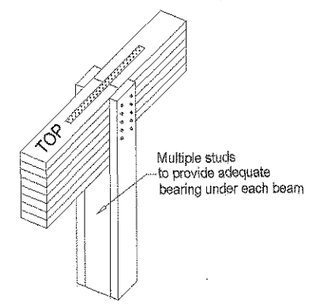

Beam to Column Connection

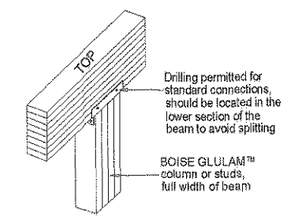

Allowable Horizontal Holes in Glulam Beams

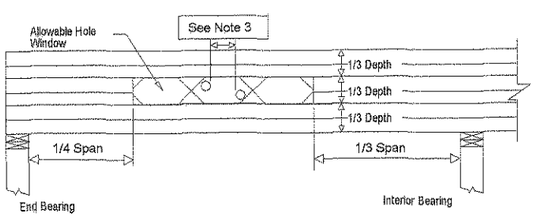

1) Square and rectangular holes not permitted.
2) Circular hole may be cut anywhere in the shaded area.
3) The horizontal distance between adjacent holes shall be at least two times the diameter of the larger hole.
4) Do not drill more than three access holes in any four foot long section of the beam.
5) The maximum round hole diameter permitted is 1" for beams 7-1/2" or less in depth, 2" holes for beams deeper than 7-1/2".
6) These limitations apply to holes drilled for plumbing or wiring access only. The size and location of holes drilled for fasteners are governed by the provisions of the National Design Specification for wood construction.
7) Beams deflect under load. Size holes to provide clearance where required.
8) This hole chart is valid for BOISE GLULAM beams supporting uniform load only. For beams supporting concentrated loads or for beams with larger or vertical holes, contact BOISE EWP Engineering.

Beam to Wall with Lateral Support

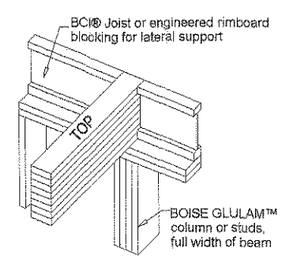

Beam to Concrete/Masonry Wall

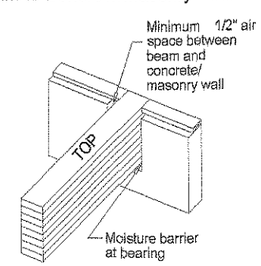

Beam Framing to Wall

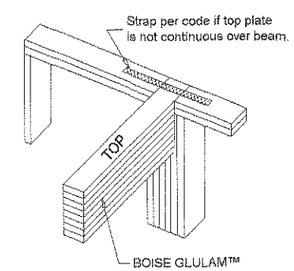

7/7/12

ADE
DESIGNERS & ENGINEERS
333 TOWER HILL DRIVE, SUITE 1 DUBLIN, OH 43017
TEL: 614.889.8340

COMMONWEALTH OF MASSACHUSETTS
HAMID ATTARHA
No. 34696
REGISTERED PROFESSIONAL ENGINEER

PROJECT: No. 86 HIGHLAND APARTMENTS

LOCATION: No. 86 HIGHLAND AVE. SOMERVILLE, MA

DRAWING: STRUCTURAL DETAILS

REVISIONS: 7/07/12

SCALE: AS SHOWN

DATE: 11/30/11

DRAWN BY:

PROJECT NO: R082000

SHEET NO: