Sheet List		
Sheet Number	Sheet Name	Sheet Issue Date
A-000	Cover Sheet	06/25/14
AD-100	Demo Plans	06/25/14
EX-400	Existing Plans & Elevations	06/25/14
A-100	Basement & 1st Floor Plans	06/25/14
A-300	Building Elevations	06/25/14
A-001	General Notes & Abbreviation	06/25/14
A-101	2nd& 3rd Floor Plans	06/25/14
A-102	4th Floor & Roof Plan	06/25/14
A-301	Building Elevations	06/25/14
A-010	Code Review	06/25/14
A-400	Building Section	06/25/14
A-500	Roof Details	06/25/14
A-700	Stair Details	06/25/14
A-800	Door & Window Details	06/25/14
A-900	Door & Window Schedules	06/25/14
A-910	Partition Types	06/25/14
A-020	Site Plan	06/25/14
A-401	Wall Section	06/25/14

Structural Drawing List		
Sheet Number	Sheet Name	Sheet Issue Date
S-0.0	Structural General Notes	06/25/2014
S-1.0	Foundation & First Floor Framing Plans	06/25/2014
S-1.1	Second & Third Floor Framing Plans	06/25/2014
S-1.2	Fourth Floor & Roof Framing Plans	06/25/2014
S-2.0	Typical Foundation Details	06/25/2014
S-2.1	Typical Foundation Details	06/25/2014
S-3.0	Typical Framing Details	06/25/2014
S-3.1	Framing Details	06/25/2014

Fire Protection Drawing List		
Sheet Number	Sheet Name	Sheet Issue Date
FP- 0.1	Detail Sheet	06/19/2014
FP- 1.0	Basement- Second Floor Plans	06/19/2014
FP- 1.1	Third & Fourth Floor Plans	06/19/2014

LOCUS MAP

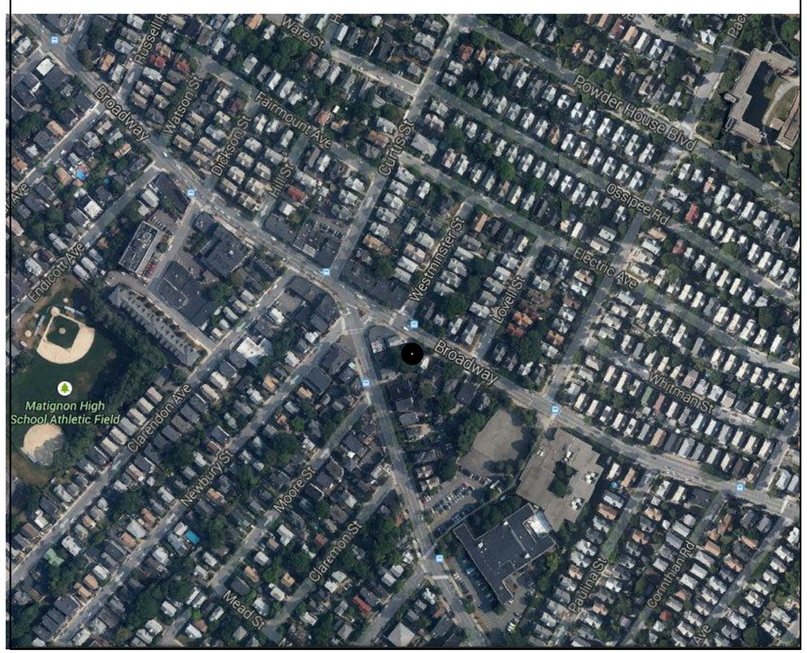

PROPOSED 1108-1110 BROADWAY RESIDENCES

PROJECT ADDRESS: 1108-1110 BROADWAY, SOMERVILLE, MA

06-25-2014 PERMIT SET

CLIENT
Sal Querusio

ARCHITECT
KHALSA DESIGN INC.
17 IVALOO STREET, SUITE 400
SOMERVILLE, MA 02143
T:(617)-591-8682

FIRE PROTECTION
ADAMS FIRE PROTECTION INC.
75 FIRST STREET UNIT #8
Bridgewater, MA 02324
T: (617) 279-0014

STRUCTURAL ENGINEER
TFMORAN INC.
48 CONSTITUTION DRIVE
BEDFORD, NH 03110
T:(603)-472-9747

PROJECT NAME

1108-1110 BROADWAY

PROJECT ADDRESS

1108-1110 BROADWAY, SOMERVILLE, MA

CLIENT

Sal Querusio

ARCHITECT
KHALSA DESIGN INC.

17 IVALOO STREET SUITE 400
SOMERVILLE, MA 02143
TELEPHONE: 617-591-8682 FAX: 617-591-2086

CONSULTANTS:

REGISTRATION

Project number	14026
Date	06-25-14
Drawn by	CC,NA,MT
Checked by	JSK
Scale	

REVISIONS

No.	Description	Date

Cover Sheet

A-000

1108-1110 BROADWAY

G:\14114026_dolan_1108-1110 Broadway\03 Drawings\01_ARCH\khalsha2014-06-25-14026_1108-1110 Broadway_CD.rvt

6/25/2014 2:43:38 PM

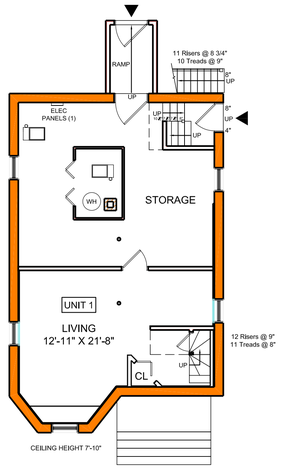

1 BASEMENT LEVEL
Scale:1/8"=1'-0"

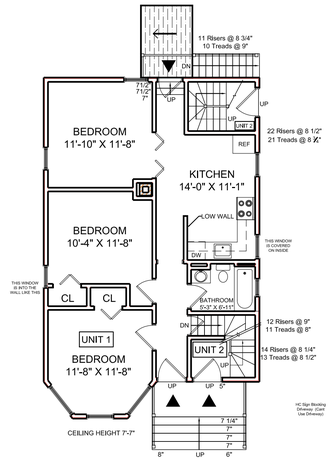

2 FIRST FLOOR
Scale:1/8"=1'-0"

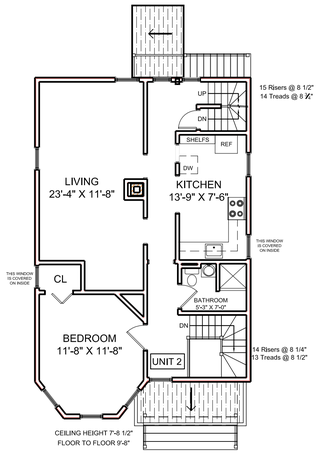

3 SECOND FLOOR
Scale:1/8"=1'-0"

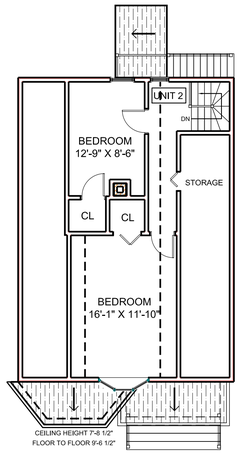

4 THIRD FLOOR
Scale:1/8"=1'-0"

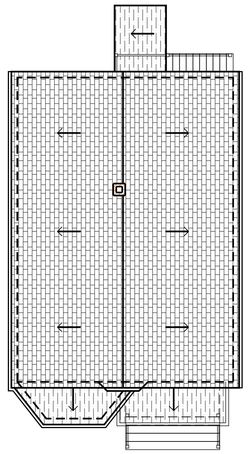

5 ROOF
Scale:1/8"=1'-0"

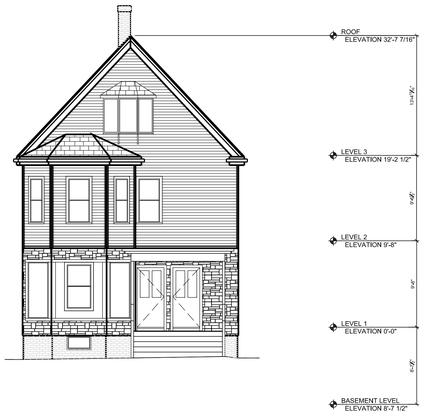

1 A301 SOUTH ELEVATION
Scale:1/8"=1'-0"

2 A301 EAST ELEVATION
Scale:1/8"=1'-0"

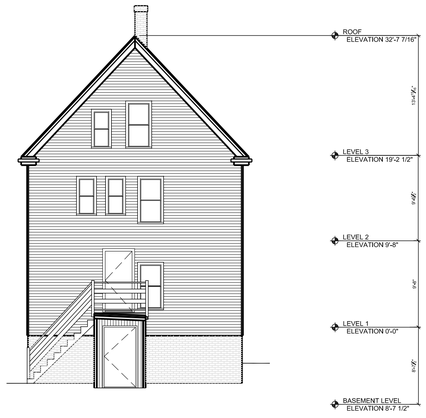

3 A301 NORTH ELEVATION
Scale:1/8"=1'-0"

4 A301 WEST ELEVATION
Scale:1/8"=1'-0"

PROJECT NAME

1108-1110 BROADWAY

PROJECT ADDRESS

1108-1110 Broadway
Somerville, MA

CLIENT

Sal Querusio

ARCHITECT

T K G
KHALSA DESIGN INC.
17 IVALOO ST.- SUITE 400, SOMERVILLE, MA. 02143
TELEPHONE 617-591-8682 FAX 617-591-2086

CONSULTANTS:

COPYRIGHT KDI © 2012
THESE DRAWINGS ARE NOW AND DO REMAIN THE SOLE PROPERTY OF KHALSA DESIGN INC. USE OF THESE PLANS OR ANY FORM OF REPRODUCTION OF THIS DESIGN IN WHOLE OR IN PART WITHOUT EXPRESS WRITTEN CONSENT IS PROHIBITED AND SHALL RESULT IN THE FULLEST EXTENT OF PROSECUTION UNDER LAW

Job No. 14026

Drawn By MT Checked JSK

Date: 06-25-14

Revisions

EXISTING PLANS & ELEVATIONS

EX-100

Scale 1'-0" = 1/8" Project Name:

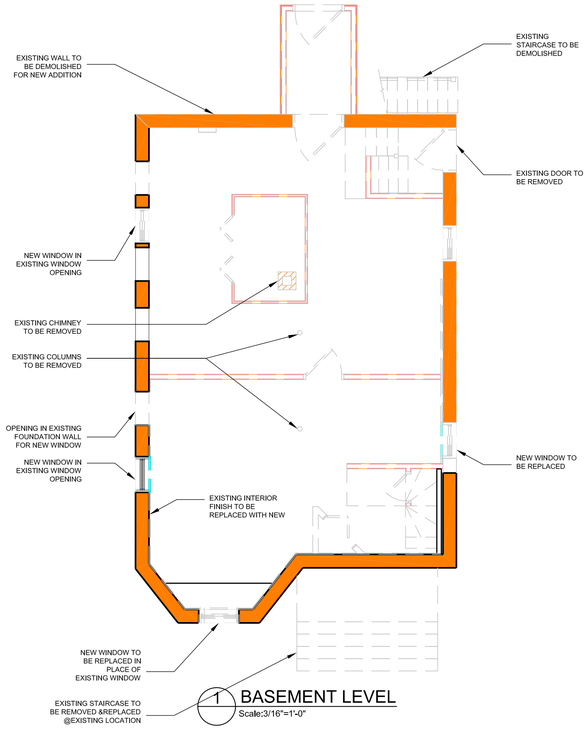

1 BASEMENT LEVEL
Scale:3/16"=1'-0"

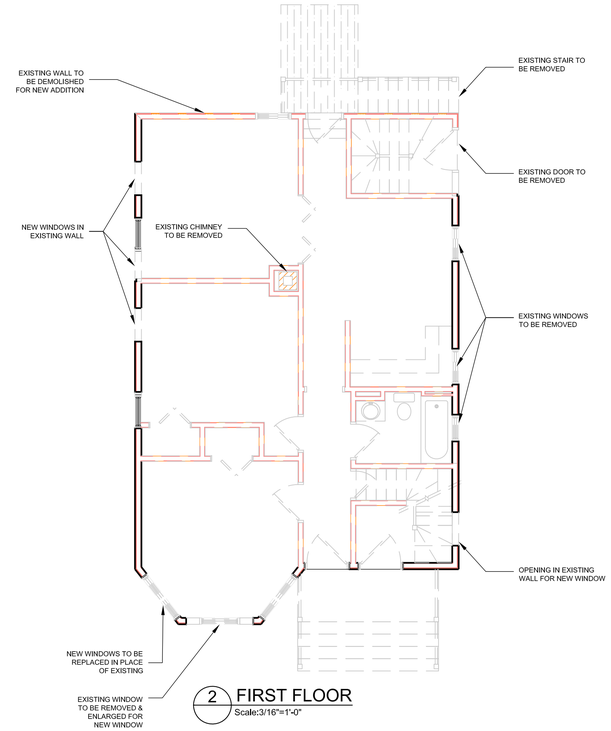

2 FIRST FLOOR
Scale:3/16"=1'-0"

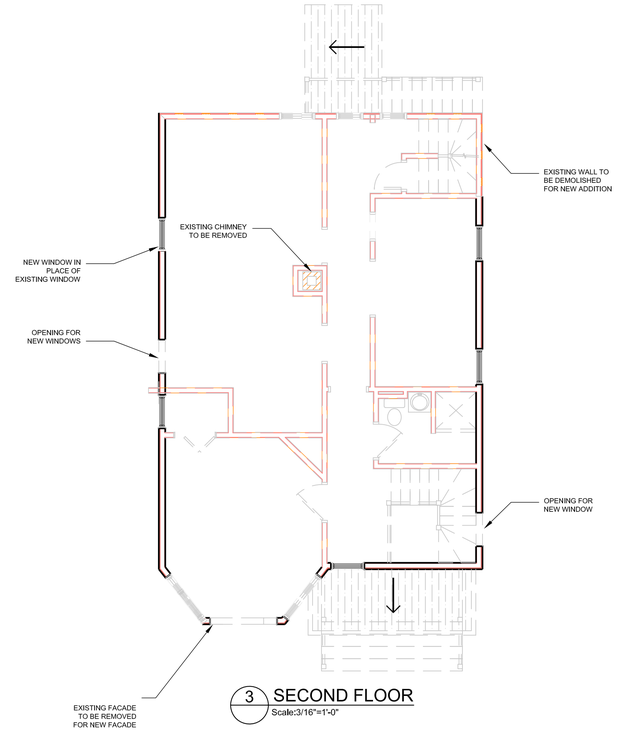

3 SECOND FLOOR
Scale:3/16"=1'-0"

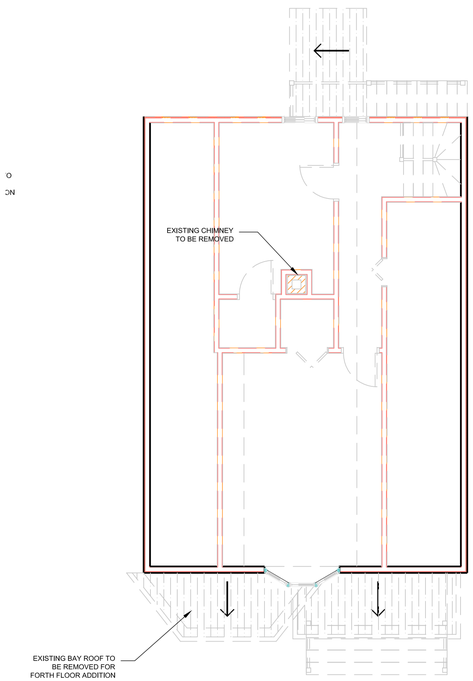

4 THIRD FLOOR
Scale:3/16"=1'-0"

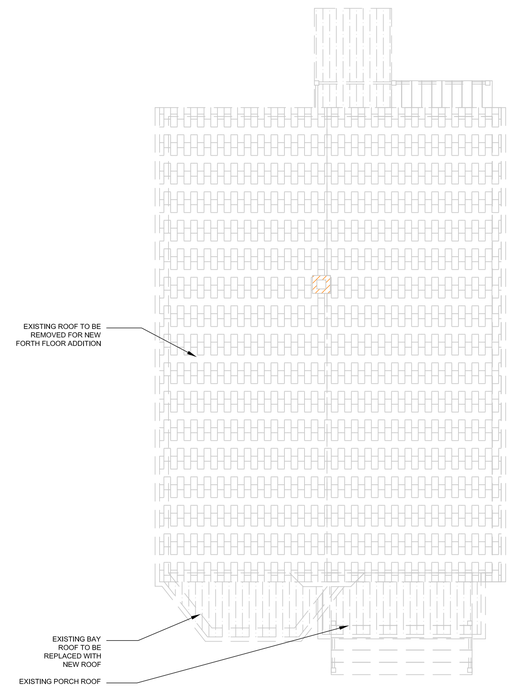

5 ROOF
Scale:3/16"=1'-0"

NOTES:

-ALL EXTERIOR WALLS & ROOF TO REMAIN U.O.N.
-ALL EXTERIOR DOORS AND WINDOWS TO BE REPLACED IN EXISTING OPENINGS U.O.N - SEE A-300
- FINISHES TBR ON ALL EXISTING WALLS TO REMAIN, TYP

LEGEND

WALL TO BE REMOVED

WALL TO REMAIN

PROJECT NAME

1108-1110 BROADWAY

PROJECT ADDRESS

1108-1110 Broadway
Somerville, MA

CLIENT

Sal Querusio

ARCHITECT

T K G
KHALSA DESIGN INC.
17 IVALOO ST.- SUITE 400, SOMERVILLE, MA. 02143
TELEPHONE 617-591-8682 FAX 617-591-2086

CONSULTANTS:

COPYRIGHT KDI © 2012
THESE DRAWINGS ARE NOW AND DO REMAIN THE SOLE PROPERTY OF KHALSA DESIGN INC. USE OF THESE PLANS OR ANY FORM OF REPRODUCTION OF THIS DESIGN IN WHOLE OR IN PART WITHOUT EXPRESS WRITTEN CONSENT IS PROHIBITED AND SHALL RESULT IN THE FULLEST EXTENT OF PROSECUTION UNDER LAW

Job No. 14026

Drawn By MT Checked JSK

Date: 06-25-14

Revisions

DEMO PLANS

AD-100

Scale 1'-0"=$\frac{1}{8}$"

Project Name:

ARCHITECTURAL ABBREVIATIONS

&	AND

A

AB	ANCHOR BOLT
ACFL	ACCESS FLOOR
ACOUS	ACOUSTICAL
ACT	ACOUSTICAL CEILING TILE
AD	AREA DRAIN
ADD	ADDENDUM
ADDL	ADDITIONAL
ADJ	ADJUST/ABLE
ADJ	ADJACENT
ADMIN	ADMINISTRATION
AFF	ABOVE FINISH FLOOR
AHU	AIR HANDLING UNIT
ALT	ALTERNATE
ALUM	ALUMINUM
ANUN	ANNUNCIATOR
AP	ACCESS PANEL
APC	ARCHITECTURAL PRECAST CONCRETE
APROX	APPROXIMATE
ARCH	ARCHITECTURAL
AUTO	AUTOMATIC
AWT	ACOUSTICAL WALL TREATMENT

B

BA	BUILDING ACCESSORY
BBD	BULLETIN BOARD
BC	BRICK COURSES
BD	BOARD
BFE	BOTTOM FOOTING ELEVATION
BG	BUMPER GUARD
BIT	BITUMINOUS
BKT	BRACKET
BLDG	BUILDING
BLKG	BLOCKING
BLT	BORROWED LIGHT
BLW	BELOW
BM	BEAM
BO	BY OWNER
BOF	BY OWNER FUTURE
BOT	BOTTOM
BR	BRICK
BRG	BEARING
BRL	BRICK LEDGE
BSMT	BASEMENT
BTWN	BETWEEN
BUR	BUILT-UP ROOFING

C

C	CHANNEL
C DISP	CUP DISPENSER
CAB	CABINET
CG	CORNER GUARD
CH	COAT HOOK
CJT	CONTROL JOINT
CCTV	CLOSED CIRCUIT TELEVISION

C

CD	COILING DOOR
CG	COILING GRILLE
CL	CENTER LINE
CL	CLASS
CLG	CEILING
CLR	CLEAR
CM	CONSTRUCTION MANAGER
CMU	CONCRETE MASONRY UNIT
CO	CLEANOUT
CO	CASED OPENING
COL	COLUMN
COMB	COMBINATION/-ED
CONC	CONCRETE
CONF	CONFERENCE
CONN	CONNECT/-ED/-ION
CONST	CONSTRUCTION
CONT	CONTINUE/OUS
CONTR	CONTRACT/OR
COORD	COORDINATE
CORR	CORRIDOR
CPT	CARPET
CT	CERAMIC TILE
CTR	CENTER
CTSK	COUNTERSUNK
CUH	CABINET UNIT HEATER
CW	CURTAIN WALL
CW	COLD WATER
CYL	CYLINDER

D

D	DEPTH OR DEEP
DEMO	DEMOLITION
DEPR	DEPRESSION
DEPT	DEPARTMENT
DET	DETAIL/S
DF	DRINKING FOUNTAIN
DIA	DIAMETER
DIAG	DIAGONAL
DIFF	DIFFUSER
DIM	DIMENSION
DISP	DISPENSER
DIST	DISTRIBUTION
DIV	DIVISION
DJT	DUMMY JOINT
DN	DOWN
DP	DEMOUNTABLE PARTITION
DP	DATA PROCESSING
DR	DOOR
DS	DOWNSPOUT
DW	DUMBWAITER
DWG	DRAWING
DWLS	DOWELS

E

E	EXISTING
EXIST	EXISTING
EC	ELECTRIC CABINET
EF	EXHAUST FAN
EIFS	EXTERIOR INSULATION AND FINISH SYSTEM

E

EJT	EXPANSION JOINT
EL	ELEVATION
ELEC	ELECTRICAL
ELEV	ELEVATOR
EMERG	EMERGENCY
ENCL	ENCLOSURE
ENTR	ENTRANCE
EO	ELECTRICAL OUTLET
EP	EXPLOSION PROOF
EQ	EQUAL
EQUIP	EQUIPMENT
ES	END SECTION
EWC	ELECTRIC WATER COOLER
EXA	EXHAUST AIR
EXC	EXCAVATE/-ED/-ION
EXH	EXHAUST HOOD
EXIST	EXISTING
EXP	EXPANSION
EXT	EXTERIOR

F

FA	FIRE ALARM
FB	FIRE BLANKET
FD	FLOOR DRAIN
FDN	FOUNDATION
FDV	FIRE DEPARTMENT VALVE
FE	FIRE EXTINGUISHER
FGS	FOAM GASKET SEAL
FH	FIRE HOSE
FHP	FULL HEIGHT PARTITION
FHV	FIRE HOSE VALVE
FIN	FINISH
FIXT	FIXTURE
FL	FLOOR
FL	FLOW LINE
FLASH	FLASHING
FLEX	FLEXIBLE
FLG	FLANGE
FLUOR	FLUORESCENT
FP	FIRE PROOFING

F

FRMG	FRAMING
FS	FULL SIZE
FS	FLOOR SINK
FSTOP	FIRESTOPPING
FT	FOOT/FEET
FTG	FOOTING
FTR	FIN TUBE RADIATION
FURR	FURRING
FUT	FUTURE

G

GA	GAUGE
GAL	GALLONS
GALV	GALVINIZED
GB	GRAB BAR
GB	GRADE BEAM
GC	GENERAL CONTRACTOR
GEN	GENERATOR
GEN	GENERAL
GL	GLASS
GMU	GLASS MASONRY UNIT
GR	GRADE
GWB	GYPSUM BOARD
GWB/SK	GYPSUM BLUE BOARD W/ PLASTER SKIM COAT
GYP SHGT	GYPSUM SHEATHING

H

H	HIGH
HB	HOSE BIB
HD	HAND DRYER
HDCP	HANDICAP
HDR	HEADER
HDW	HARDWARE
HM	HOLLOW METAL
HORIZ	HORIZONTAL
HPT	HIGHPOINT
HR	HANDRAIL
HT	HEIGHT
HTR	HEATER
HVAC	HEATING, VENTILATING, AIR CONDITIONING
HW	HOT WATER
HWD	HARDWOOD

I

IC	INTERCOM
ID	INSIDE DIAMETER
IN	INCH
INSUL	INSULATION
INT	INTERIOR
ISO	ISOLATION

J

JAN	JANITOR
JB	JUNCTION BOX
JST	JOIST
JT	JOINT

K

KO	KNOCK OUT

L

L	ANGLE
L	LAVATORY
LAV	LAVATORY
LB	POUND
LCD	LINEAR CEILING DIFFUSER
LF	LINE FIGURED
LIN	LINEAR
LKR	LOCKER
LLH	LONG LEG HORIZONTAL
LLV	LONG LEG VERTICAL
LMC	LINEAR METAL CEILING
LOC	LOCATION OR LOCATE
LPT	LOW POINT
LS	LAWN SPRINKLING
LT	LIGHT
LTG	LIGHTING
LVR	LOUVER
LWC	LINEAR WOOD CEILING

M

M	MIDDLE
MAN	MANUAL
MATL	MATERIAL
MAX	MAXIMUM
MBD	MARKER BOARD
MC	MEDICINE CABINET
MCU	MODULAR CUBLING UNIT
MECH	MECHANICAL
MEMB	MEMBRANE
MET	METAL
MEZZ	MEZZANINE
MFR	MANUFACTURER
MH	MANHOLE
MHC	MATERIAL HANDLING CONVEYOR
MIN	MINIMUM
MIR	MIRROR
MISC	MISCELLANEOUS
MO	MASONRY OPENING
MONO	MONOLITHIC
MPC	METAL PAN CEILING
MPU	MULTI-PURPOSE UNIT
MTD	MOUNTED
MTR	MOTOR
MULL	MULLION

N

NA	NOT APPLICABLE
NIC	NOT IN CONTRACT
NO	NUMBER
NOM	NOMINAL
NRC	NOISE REDUCTION COEFFICIENT
NT	NOTE
NTS	NOT TO SCALE

O

OC	ON CENTER
OD	OUTSIDE DIAMETER
OFF	OFFICE
OH	OVERHEAD
OP	OPERABLE PARTITION
OPER	OPERATOR
OPNG	OPENING
OPP	OPPOSITE
ORD	OVERFLOW ROOF DRAIN

P

PART	PARTITION
PB	PUSH BUTTON
PC	PRECAST CONCRETE
PCD	PAPER CUP DISPENSER
PED	PEDESTAL
PL	PLATE
PL	PROPERTY LINE
PLAM	PLASTIC LAMINATE
PLBG	PLUMBING
PLS	PLASTER
PLW	PLYWOOD
PNL	PANEL
PR	PAIR
PRELIM	PRELIMINARY
PRES	PLASTIC RESIN
PRESS	PRESSURE
PRIM	PRIMARY
PROJ	PROJECTION
PRV	POWER ROOF VENTILATOR
PT	PAINT
PTC	PAPER TOWEL CABINET
PTR	PRINTER
PVC	POLYVINYL CHLORIDE

Q

QT	QUARRY TILE

R

R	RADIUS
R	RISER
RA	RETURN AIR
RAD	RADIATION
RB	RESILIENT BASE
RD	ROOF DRAIN
RE	RELOCATE EXISTING
REC	RECESSED
REF	REFERENCE
REFR	REFRIGERATOR
REG	REGISTER
REINF	REINFORCE/-ED/-ING
REM	REMOVE
REQD	REQUIRED
RET	RETAINING
REV	REVERSE
REV	REVISE
RF	RESILIENT FLOOR
RH	ROOF HATCH
RM	ROOM
RO	ROUGH OPENING
RS	ROUGH SLAB
RWC	RAIN WATER CONDUCTOR

S

S	SINK
SCHED	SCHEDULE
SD	SHOWER DRAIN
SD	SMOKE DAMPER
SDISP	SOAP DISPENSER
SECT	SECTION
SECY	SECRETARY
SF	STORE FRONT
SF	SQUARE FOOT
SH	SHOWER
SHD	SHOWER HEAD
SHT	SHEET
SHTG	SHEATHING
SIM	SIMILAR
SL	SEALER
SLNT	SEALANT
SLV	SLEEVE
SM	SURFACE MOUNTED
SNC	SANITARY NAPKIN CABINET
SND	SANITARY NAPKIN DISPOSER
SOG	SLAB ON GRADE
SP	STANDPIPE
SPEC	SPECIFICATIONS
SPR	SINGLE PLY ROOF
SQ	SQUARE
SQ YD	SQUARE YARD
SR	SERVICE RECEPTOR
SS	SERVICE SINK
SST	STAINLESS STEEL
ST	STREET
ST	STONE TILE
STC	SOUND TRANSMISSION
STD	STANDARD
STL	STEEL
STN	STONE
STNL	STONE LEDGE
STOR	STORAGE
STRUCT	STRUCTURAL

S

STS	STEEL STRUCTURE
SUPV	SUPERVISOR
SUSP	SUSPENDED
SW	STEEL WINDOWS
SW	SWITCH
SWD	SOFTWOOD
SYM	SYMMETRICAL

T

T	TOP
TAN	TANGENT
TBD	TACKBOARD
TC	TIME CLOCK
TCAB	TOWEL CABINET
TDISP	TISSUE DISPENSER
TDR	TRENCH DRAIN
TEL	TELEPHONE
TEMP	TEMPERATURE
TER	TERRAZZO
TG	TONGUE & GROOVE
THRES	THRESHOLD
TPG	TEMPERED PLATE GLASS
TPH	TOILET PAPER HOLDER
TR	TREAD
TRANSF	TRANSFORMER
TS	TUBE SECTION
TV	TELEVISION
TYP	TYPICAL

U

U	URINAL
UC	UNDERCUT
UFD	UNDER FLOOR DUCT
UG	UNDERGROUND
UH	UNIT HEATER
UNFIN	UNFINISHED
UNO	UNLESS NOTED OTHERWISE
US	UTILITY SHELF
UTIL	UTILITY

V

VC	VALVE CABINET
VENT	VENTILATION
VERT	VERTICAL
VEST	VESTIBULE
VR	VAPOR RETARDER
VTR	VENT THROUGH ROOF

W

W	WIDTH/WIDE
W	WIDE FLANGE
W	WITH
W/O	WITHOUT
WC	WATER CLOSET
WC	WALL COVERING
WD	WOOD
WDW	WINDOW
WG	WALL GUARD
WH	WALL HYDRANT
WHCH	WHEELCHAIR
WHTR	WATER HEATER
WP	WATERPROOF
WR	WASTE RECEPTACLE
WS	WEATHERSTRIP
WSCT	WAINSCOT
WT	WINDOW TREATMENT
WT	WEIGHT
WW	WOOD WINDOW
WWF	WELDED WIRE FABRIC

SYMBOLS

- LEVEL LINE, CONTROL OR DATUM ELEVATION
- REVISION NUMBER
- PARTITION TYPE
- CASEWORK TYPE
- INTERIOR WINDOW TYPE
- WINDOW TYPE
- COLUMN REFERENCE GRID
- BUILDING SECTION REFERENCE DRAWING NUMBER
- WALL SECTION REFERENCE DRAWING NUMBER
- SECTION DETAIL REFERENCE DRAWING NUMBER
- 1 1/2" DIMENSION LINE
- BREAK LINE TO BREAK OFF PARTS OF A DRAWING
- DETAIL REFERENCE DRAWING NUMBER
- EXTERIOR ELEVATION NUMBER
- INTERIOR ELEVATION KEY
- 141 ROOM/SPACE NUMBER
- 111B DOOR NUMBER
- SEALANT AND BACKER ROD JOINT
- DASH AND DOT CENTER LINE
- DASH AND DOUBLE DOT LINES PROPERTY LINES, BOUNDARY LINES
- DOTTED LINE HIDDEN OR CONSTRUCTION ABOVE, BEYOND

INDICATION OF MATERIALS

EARTH	EARTH/ COMPACT FILL		POROUS FILL/ GRAVEL
CONCRETE	CONCRETE		SAND MORTAR
MASONRY	BRICK		CONCRETE MASONRY UNIT
STONE	RUBBLE		MARBLE
METAL	STEEL/IRON		ALUMINUM
WOOD	WOOD SHIM		CONTINUOUS BLOCKING
	PLYWOOD		FINISH
GLASS	GLASS		GLASS BLOCK
INSULATION	BATT/ LOOSE FILL		RIGID
	FIRE SAFING		
FINISHES	GYPSUM WALL BOARD		ACOUSTICAL TILE

GENERAL NOTES

1. GENERAL CONDITIONS : THE GENERAL CONDITIONS FOR THIS CONTRACT SHALL BE AIA DOCUMENT A201 (2007 EDITION) EXCEPT AS HEREIN AMENDED.
2. SCOPE : WORK TO INCLUDE DEMOLITION AND CONSTRUCTION AS INDICATED ON THE DRAWINGS NECESSARY FOR A COMPLETE INSTALLATION. EACH CONTRACTOR SHALL RESPECT THE WORK OF OTHER CONTRACTORS AND ARE RESPONSIBLE FOR AND LIABLE TO REPAIR OR REPLACE ANY DAMAGE CAUSED BY THEIR WORK.
3. CODES : ALL WORK SHALL BE PERFORMED IN STRICT COMPLIANCE WITH LOCAL AND STATE CODES AND REGULATIONS HAVING JURISDICTION. THE CONTRACTOR SHALL PROTECT AND INDEMNIFY THE OWNER AND ARCHITECT AGAINST ANY CLAIM OR LIABILITY ARISING FROM ANY SUCH CODE OR REGULATION.
4. THE CONTRACTOR SHALL OBTAIN AND PAY FOR ALL REQUIRED PERMITS, INSPECTIONS AND APPROVALS.
5. QUALITY : WORKMANSHIP SHALL BE OF THE HIGHEST TYPE, AND MATERIALS USED OR SPECIFIED OF THE BEST QUALITY THAT THE MARKET AFFORDS. ALL INSTALLATIONS AND APPLICATIONS SHALL CONFORM TO THE MANUFACTURER'S SPECIFICATIONS.
6. COORDINATION OF THE WORK : THE GENERAL CONTRACTOR SHALL COORDINATE THE WORK CONTRACT FROM THE CONTRACTOR OR THE OWNER. THE CONTRACTOR'S INSTRUCTIONS SHALL BE FOLLOWED BY ALL TRADES.
7. MECHANICAL TRADES : THE MECHANICAL AND ELECTRICAL TRADES SHALL INSTALL THEIR WORK AS RAPIDLY AS THE OTHER WORK PERMITS AND SHALL COMPLETE THIS WORK BY THE TIME THE OTHER TRADES HAVE FINISHED.
8. EXAMINATION OF THE SITE AND DOCUMENTS : THE CONTRACTOR, BEFORE SUBMITTING HIS PROPOSAL, SHALL VISIT THE SITE AND EXAMINE FOR HIMSELF ALL CONDITIONS AND LIMITATIONS WHICH EFFECT THE CONTRACT. THE CONTRACTOR SHALL CAREFULLY EXAMINE ALL CONTRACT DOCUMENTS. TITLES AND SUBDIVISIONS IN THESE DOCUMENTS ARE FOR CONVENIENCE, AND NO REAL OR ALLEGED ERRORS IN ARRANGEMENT OF MATTER SHALL BE REASON FOR OMISSION OR DUPLICATION BY ANY CONTRACTOR.
9. SEPARATE CONTRACTS : THE OWNER RESERVES THE RIGHT TO LET OTHER CONTRACTS IN CONNECTION WITH THE WORK. THE GENERAL CONTRACTOR SHALL AFFORD OTHER CONTRACTORS REASONABLE OPPORTUNITY FOR THE EXECUTION OF THEIR WORK AND SHALL PROPERLY CONNECT AND COORDINATE HIS WORK WITH THEIRS.
10. GUARANTEE : ALL MATERIALS AND WORKMANSHIP SHALL BE GUARANTEED FOR A PERIOD OF ONE YEAR FROM THE DATE OF FINAL ACCEPTANCE UNLESS SPECIFIED OTHERWISE FOR A LONGER PERIOD OF TIME ON CERTAIN ITEMS.
11. TRASH REMOVAL : PRIOR TO STARTING WORK, THE GENERAL CONTRACTOR SHALL PROVIDE A CONSTRUCTION DUMPSTER AND PICKUP SERVICE FOR ALL CONSTRUCTION DEBRIS (DUMPSTER LOCATION TO BE COORDINATED WITH THE OWNER). AT THE END OF EACH DAY, THE GENERAL CONTRACTOR SHALL REMOVE ALL TRASH AND DEBRIS FROM THE SITE AND OR WITHIN THE BUILDING. IF TRASH AND DEBRIS ARE NOT REMOVED, THE OWNER MAY (AT HIS OPTION) PAY FOR THE REMOVAL AND BACK CHARGE THE CONTRACTOR.
12. THE CONTRACTOR SHALL VERIFY ALL DIMENSIONS AND CONDITIONS AT THE SITE AND REPORT ANY DISCREPANCIES TO THE ARCHITECT BEFORE PROCEEDING WITH THE WORK.
13. ALL SECTIONS, DETAILS, MATERIALS, METHODS, ETC. SHOWN AND/OR NOTED ON ANY PLAN OR SECTION SHALL APPLY TO ALL OTHER SIMILAR LOCATIONS UNLESS OTHERWISE NOTED.
14. THE GENERAL CONTRACTOR SHALL SAFELY SHORE, BRACE, OR SUPPORT ALL WORK AS REQUIRED. THIS WORK SHALL BE THE FULL RESPONSIBILITY OF THE CONTRACTOR AND NO ACT, DIRECTION, OR REVIEW OF ANY SYSTEM OR METHOD BY THE ARCHITECT SHALL RELIEVE THE CONTRACTOR OF THIS RESPONSIBILITY.
15. IT IS NOT THE INTENT OF THESE DRAWINGS TO SHOW NOR INDICATE ANY OR ALL FASTENING OR FRAMING TECHNIQUES /DEVICES, NOR BE ABLE TO SHOW ALL CONDITIONS PRESENT.
16. ALL WORK IS NEW UNLESS OTHERWISE NOTED.
17. ALL WALLS AND CEILINGS TO BE 5/8in FIRE CODE OR 1/2in GYPSUM BOARD, 5/8in MOISTURE RESISTANT TYPE X OR 5/8in CEMENT BOARD. FINISH AND TEXTURE TO BE SELECTED BY OWNER. MATERIAL AS MANUFACTURED BY U.S. GYPSUM OR EQUAL FINISH (CEMENT ACCESSORIES AND TAPE OR SKIM COAT). ALL JOINTS AND NAIL HEADS READY FOR PAINT, TILE, WOOD TRIM, VWC, OR PANELING.
18. STORAGE : THE CONTRACTOR SHALL PROVIDE ON SITE WEATHER PROTECTED STORAGE SPACE, I.E.: TRAILER. STORAGE OF CONSTRUCTION MATERIALS IN THE EXISTING BUILDING WILL NOT BE PERMITTED.
19. PROTECTION : THE CONTRACTOR SHALL PROTECT ALL PUBLIC AND ADJACENT AREAS FROM DAMAGE DURING CONSTRUCTION.
20. TEMPORARY SERVICES : THE CONTRACTOR WILL PAY FOR EXISTING SERVICES (WATER, TELEPHONE AND ELECTRICITY) AND WILL TURN OVER THESE SERVICES TO THE OWNER UPON FINAL ACCEPTANCE OF THIS PROJECT.
21. THE CONTRACTOR SHALL VERIFY LOCATION AND ACTUAL DEPTH OF ALL EXISTING SANITARY PIPING, STORM DRAINS, GAS AND WATER MAINS, ELECTRIC LINES AND PIPES. HE IS ALSO ADVISED TO VERIFY ACTUAL INVERTS OF SANITARY AND STORM LINES BY HAND DUG TEST PITS WELL IN ADVANCE OF TRENCHING AND CONSTRUCTION. ANY DISCREPANCY IN THIS PLAN AND ACTUAL FIELD CONDITIONS SHALL BE REPORTED TO THE ARCHITECT. ALL NECESSARY PERMITS AND APPROVALS MUST BE OBTAINED FROM PROPER AUTHORITIES.
22. ARCHITECTURAL, MECHANICAL, ELECTRICAL, ELEVATOR, & SPRINKLER : EACH CONTRACTOR SHALL SUBMIT SHOP DRAWINGS TO THE ARCHITECT FOR APPROVAL PRIOR TO FABRICATION.
23. ALL WORK IS NEW UNLESS OTHERWISE NOTED.
24. DAMAGE : THE GENERAL CONTRACTOR IS RESPONSIBLE FOR ANY DAMAGE TO EXISTING BUILDING, WALLS, CEILINGS, FLOORS, FURNITURE AND FURNISHINGS. DAMAGED SURFACES DUE TO CONSTRUCTION TO BE PATCHED, REPAIRED AND/OR REPLACED AS REQUIRED AND BLEND TO MATCH EXISTING ADJACENT SURFACES AT NO ADDITIONAL COST TO OWNER.
25. THE GENERAL CONTRACTOR SHALL PREPARE A BOOKLET CONTAINING : LIST OF SUBCONTRACTORS USED ON THIS JOB WITH NAMES, ADDRESSES AND TELEPHONE NUMBERS. ALL WARRANTIES AND INSTRUCTION MANUALS FOR EQUIPMENT AND MATERIALS INSTALLED WILL BE ISSUED TO THE OWNER PRIOR TO FINAL ACCEPTANCE OF BUILDING, AND PRESENT BOOKLET TO OWNER PRIOR TO FINAL ACCEPTANCE OF OWNER.
26. CARPET AND/OR TILE : CARPET AND/OR TILE AS SELECTED AS PER DRAWINGS.
27. HANDICAPPED REQUIREMENTS : THE GENERAL CONTRACTOR WILL ACQUAINT HIMSELF WITH THE ARCHITECTURAL ACCESS BOARD (AAB) CODE FOR THE STATE OF MASSACHUSETTS AND THE ADA (AMERICANS WITH DISABILITIES ACT) TO ENSURE THAT THIS FACILITY WILL BE ACCESSIBLE.
28. SPRINKLER HEAD LOCATION : REFER TO N.F.P.A. STANDARDS. SPRINKLER HEADS TO BE LOCATED PER CODE. SHOP DRAWINGS ARE REQUIRED TO BE SUBMITTED TO THE CONTRACTOR FOR APPROVAL PRIOR TO INSTALLATION.
29. THE GENERAL CONTRACTOR SHALL COORDINATE THE LOCATION AND SIZE OF OPENINGS FOR VENTS, PIPES, INSERTS, BOXES, HANGERS, ETC.
30. ALL INTERIOR FINISHES AND FURNISHINGS FOR CEILINGS, WALL AND FLOORS SHALL BE CLASS 1in WITH A FLAME SPREAD RATING OF 0 TO .25.
31. SUBMIT SAMPLES OF ALL PAINTS AND STAINS FOR APPROVAL PRIOR TO APPLICATION.
32. BEFORE COMMENCING WORK, THE GENERAL CONTRACTOR WILL MEET WITH THE APPOINTED COMPANY REPRESENTATIVE TO OUTLINE PHASING OF CONSTRUCTION AND DISPOSITION OF EXISTING CONSTRUCTION MATERIALS AND/OR EQUIPMENT.
33. ALL WOOD BLOCKING TO BE PRESSURE TREATED, FIRE RETARDANT.

PROJECT NAME

1108-1110 BROADWAY

PROJECT ADDRESS

1108-1110 BROADWAY, SOMERVILLE, MA

CLIENT

Sal Querusio

ARCHITECT

KHALSA DESIGN INC.

17 IVALOO STREET SUITE 400
SOMERVILLE, MA 02143

TELEPHONE: 617-591-8682 FAX: 617-591-2086

CONSULTANTS:

REGISTRATION

Project number	14026
Date	06-25-14
Drawn by	CC,NA,MT
Checked by	JSK
Scale	12" = 1'-0"

REVISIONS

No.	Description	Date

General Notes & Abbreviation

A-001

1108-1110 BROADWAY

G:\14114026_dolan_1108-1110 Broadway\03 Drawings\01_ARCH\khalsa\2014-06-25-14026_1108-1110 Broadway_CD.rvt

6/25/2014 2:43:38 PM

FIRE PROTECTION LEGEND

- 1 HR FIRE RATED WALL/ PARTITION
- EXIT PATH
- 1 HR FIRE RATED FLOOR CEILING ASSEMBLY

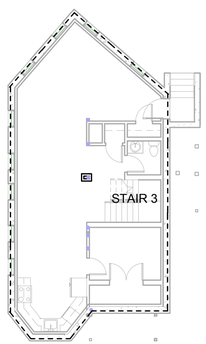

2 Code Review of Basement
3/32" = 1'-0"

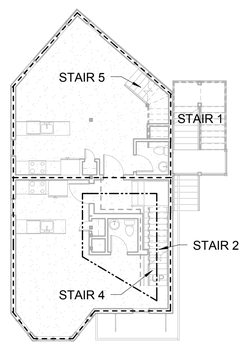

5 Code Review of Second Flr Level
3/32" = 1'-0"

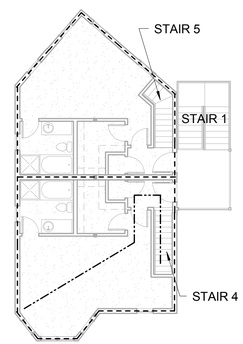

4 Code Review of Fourth Flr Level
3/32" = 1'-0"

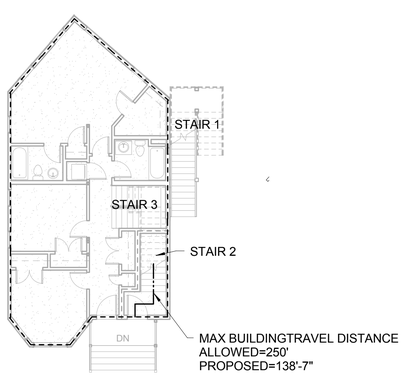

3 Code Review of First Flr Level
3/32" = 1'-0"

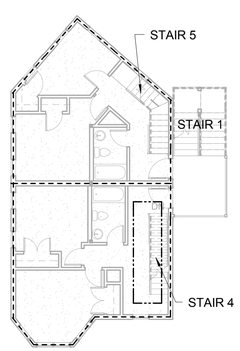

6 Code Review of Third Flr Level
3/32" = 1'-0"

BUILDING CODE REVIEW
INTERNATIONAL BUILDING CODE-2009 EDITION

USE GROUP - MULTI-FAMILY

TABLE 503: TYPE OF CONSTRUCTION

BUILDING A NO	FLOOR	USE GROUP				ALLOWED AREA S.F.	ALLOWED STORIES/ HEIGHT	INCREASE AREA S.F.	INCREASE STORIES	TOTAL ALLOWED	PROVIDED AREA S.F.	PROVIDED STORIES/ HEIGHT	REMARKS
0	BASEMENT	"R2"	RESIDENTIAL MULTI-FAMILY	"VA"	COMBUSTIBLE PROTECTED	12,000	3	NOT USED	1	12,000	988	4	SEE NOTE #1,2,3,4,5,6 BELOW FOR INCREASE INFORMATION
1	FIRST	"R2"	RESIDENTIAL MULTI-FAMILY	"VA"	COMBUSTIBLE PROTECTED	-	3	NOT USED	1	-	988	4	SEE NOTE #1,2,3,4,5,6 BELOW FOR INCREASE INFORMATION
2	SECOND	"R2"	RESIDENTIAL MULTI-FAMILY	"VA"	COMBUSTIBLE PROTECTED	-	3	NOT USED	1	-	988	4	SEE NOTE #1,2,3,4,5,6 BELOW FOR INCREASE INFORMATION
3	THIRD	"R2"	RESIDENTIAL MULTI-FAMILY	"VA"	COMBUSTIBLE PROTECTED	-	3	NOT USED	1	-	988	4	SEE NOTE #1,2,3,4,5,6 BELOW FOR INCREASE INFORMATION
4	FOURTH	"R2"	RESIDENTIAL MULTI-FAMILY	"VA"	COMBUSTIBLE PROTECTED	-	3	NOT USED	1	-	988	4	SEE NOTE #1,2,3,4,5,6 BELOW FOR INCREASE INFORMATION

BUILDING "R2" RESIDENTIAL AREA = 4,940 S.F. TOTAL BUILDING "A" AREA = 4,940 S.F.

SECTION 508.4

Fire Resistance Rating Requirements for Fire Separation Assemblies Between Fire Areas (in Hours)

OCCUPANCY	R2
R2	-

SECTION 506.3

1. ALLOWABLE AREA INCREASE DUE TO AUTOMATIC FIRE SUPPRESSION SYSTEM = 200% (NOT USED)
2. USE GROUP "R2"= 4,940 S.F.
3. ALLOWABLE HEIGHT INCREASE DUE TO AUTOMATIC SPRINKLES SYSTEM - 1 STORY"
4. ALLOWABLE AREA INCREASE DUE TO STREET FRONTAGE- SECTION - 506.2 - (NOT USED)
5. AREA ANALYSIS ALLOWABLE AREA INCREASE NOT USED DUE TO COMPLIANCE WITH BASIC REQUIREMENTS OF TABLE 503

NOTE: BUILDING IS FULLY FIRE SUPPRESSED

FIRE RESISTANCE OF STRUCTURAL ELEMENTS:

TABLE 601:

STRUCTURAL ELEMENTS	TYPE OF CONSTRUCTION VA	FIRE RATING FILE #
1. EXTERIOR FRAME: INCLUDING COLUMNS, GIRDERS, TRUSSES	1HR	
2. BEARING WALLS EXTERIOR INTERIOR	1HR 1HR	
3. NONBEARING WALLS AND PARTITIONS: EXTERIOR (table 602)	1HR	
4. NONBEARING WALLS AND PARTITIONS: INTERIOR	0HR	
5. FLOOR CONSTRUCTION INCLUDING SUPPORTING BEAMS AND JOISTS	1HR	
6. ROOF CONSTRUCTION: INCLUDING SUPPORTING BEAMS AND JOISTS	1HR	

Fire Resistance Rating Requirements for Exterior Walls

TABLE 602:

Fire Separation Distance = X (feet)	TYPE OF CONSTRUCTION	Occupancy R, S & U Type 5A
x < 5 (c)	VA	1
5 ≤ x <10)	VA	1
10 ≤ x <30	VA	0
x ≥ 30	VA	0

EGRESS CALCULATIONS:

TABLE 1004.1.1:
RESIDENTIAL 1/200 SF GROSS

#	FLOOR / USE GROUP	AREA/200	OCCUPANT/ FLOOR
0	BASEMENT/ R-2	988 / 200	5
1	FIRST/ R-2	988 / 200	5
2	SECOND/ R-2	988 / 200	5
3	THIRD/ R-2	988 / 200	5
4	FOURTH/ R-2	988 / 200	5
	TOTAL # 0,1,2,3,4		25

SECTION 1005.1

STAIR WIDTH
WIDTH IN INCHES
STAIRS 0.3/PERSON

#	STAIR	EGRESS CAPACITY 0.3 * OCCUPANTS	WIDTH IN INCH ALLOWED	WIDTH PROVDED
1	STAIR #1	7.5"	44"	44"
2	STAIR #2	7.5"	44"	44"
3	STAIR #3	7.5"	36"	36"
4	STAIR #4	7.5"	36"	36"
5	STAIR #5	7.5"	36"	36"

EGRESS WIDTH (OTHER THAN STAIRS)
WIDTH IN INCHES
0.2/OCCUPANT

#	DOOR / CORRIDOR	EGRESS CAPACITY 0.2 * OCCUPANTS	WIDTH IN INCH ALLOWED	WIDTH PROVDED
1	CORRIDOR	5" 5"	32" 44"	36" 44"
EXTERIOR EGRESS DOOR		5"	32"	36"

PROJECT NAME

1108-1110 BROADWAY

PROJECT ADDRESS

1108-1110 BROADWAY,
SOMERVILLE, MA

CLIENT

Sal Querusio

ARCHITECT

KHALSA DESIGN INC.

17 IVALOO STREET SUITE 400
SOMERVILLE, MA 02143
TELEPHONE: 617-591-8682 FAX: 617-591-2086

CONSULTANTS:

REGISTRATION

Project number	14026
Date	06-25-14
Drawn by	CC,NA,MT
Checked by	JSK
Scale	As indicated

REVISIONS

No.	Description	Date

Code Review

A-010

1108-1110 BROADWAY

G:\14\14026_dolan_1108-1110 Broadway\03 Drawings\01_ARCH\khalsha\2014-06-25-14026_1108-1110 Broadway_CD.rvt

6/25/2014 2:43:41 PM

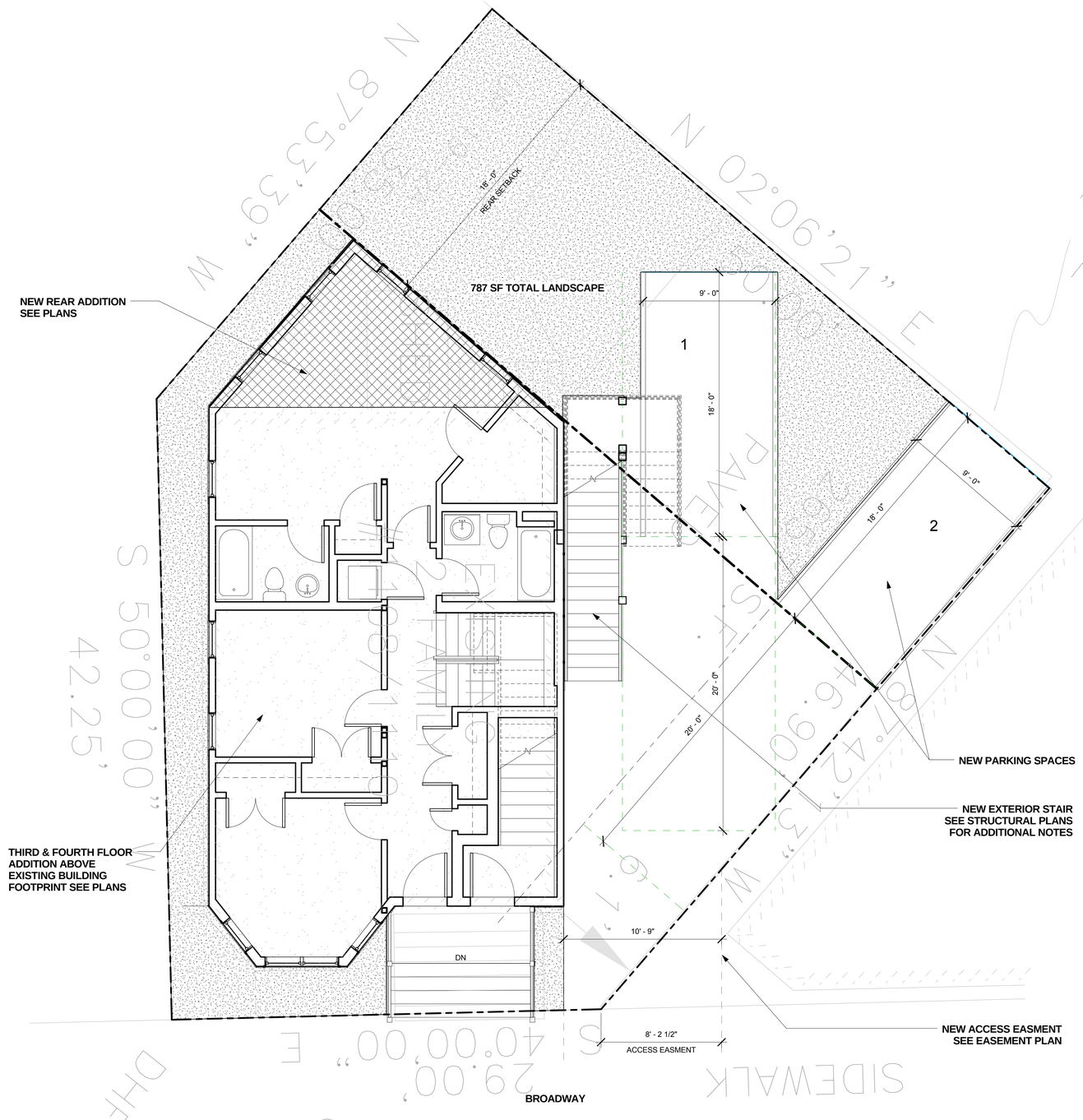

1 Site Plan
1/4" = 1'-0"

ZONING CHART

BA ZONE	REQUIRED	EXISTING - 2DU	PROPOSED - 3 DU
MIN. LOT SIZE	NA	2673 SF	2673 SF
LOT AREA/DU 1-9DU	875 SF/DU	1336 SF/DU	891 SF/DU
FAR	2	1.28 / 3433SF	1.66 / 4457SF
MAX GROUND COVER	80%	32.1% 859SF	35.5% / 947SF
LANDSCAPE AREA	10%	0%	29.4% 787SF
PERMEABLE AREA	35%	0%	35.9% 2727SF
MAX HEIGHT	50'-0"	39' - 5"	45' - 6"
FRONT SETBACK	N/A	3'-4"	3'-4"
LEFT SIDE SETBACK	N/A	3'-2'	3'-2"
RIGHT SIDE SETBACK	N/A	6'-4"	6'-4"
REAR SETBACK	18'	17'-4"	18'
FRONTAGE	N/A	26'-1 1/2'	26'-1 1/2'
PARKING		0	2

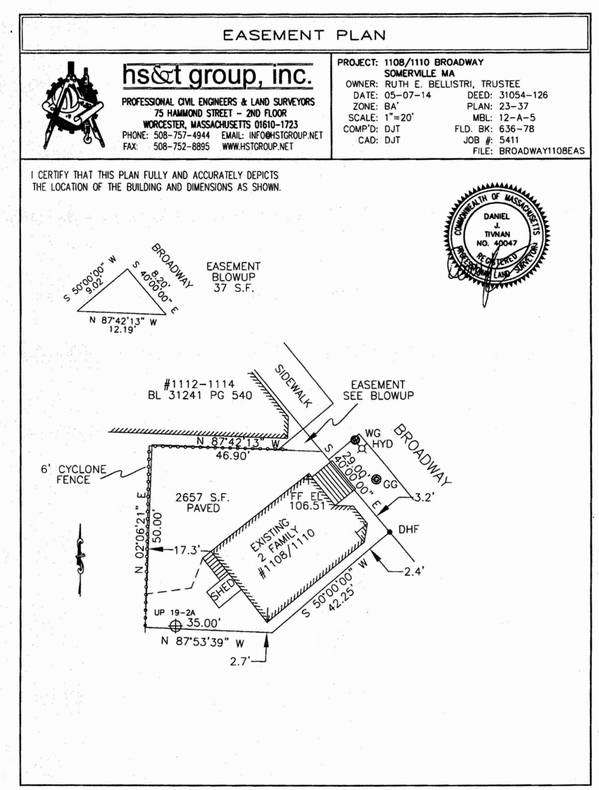

PROJECT NAME

1108-1110 BROADWAY

PROJECT ADDRESS

1108-1110 BROADWAY, SOMERVILLE, MA

CLIENT

Sal Querusio

ARCHITECT

KHALSA DESIGN INC.

17 IVALOO STREET SUITE 400
SOMERVILLE, MA 02143
TELEPHONE: 617-591-8682 FAX: 617-591-2086

CONSULTANTS:

REGISTRATION

Project number	14026
Date	06-25-14
Drawn by	CC,NA,MT
Checked by	JSK
Scale	As indicated

REVISIONS

No.	Description	Date

Site Plan

A-020

1108-1110 BROADWAY

G:\14\14026_dolan_1108-1110 Broadway\03 Drawings\01_ARCH\nuisha\2014-06-25-14026_1108-1110 Broadway_CD.rvt

6/25/2014 2:43:50 PM

LEGEND

- SMOKE DETECTOR
- SMOKE/CO DETECTOR
- EXISTING WALLS TO REMAIN
- NEW WALLS
- 1 HR DEMISING WALLS

GENERAL NOTES

1. ALL SMOKE ALARMS TO BE INTERCONNECTED AND HARD WIRED
2. KITCHEN CABINETS TO BE PURCHASED BY OWNER
3. ALL APPLIANCES TO BE PURCHASED BY OWNER
4. SEE EXTERIOR ELEVATIONS FOR WINDOW TYPES & CLADDING MATERIALS
5. UNLESS OTHERWISE NOTED ALL INTERIOR PARTITIONS ARE TYPE "A"
5. UNLESS OTHERWISE NOTED ALL NEW EXTERIOR PARTITIONS ARE TYPE "F"
5. UNLESS OTHERWISE NOTED ALL EXISTING EXTERIOR PARTITIONS ARE TYPE "G"
6. ALL INTERIOR FINISHES TO BE DETERMINED BY OWNER
7. MR GWB. BOARD TO BE USED IN ALL BATHROOMS AND KITCHENS
8. SEE A-800 FOR DOOR & WINDOW DETAILS
9. SEE A-910 FOR PARTITION TYPES
10. ALL INTERIOR DIMENSIONS ARE FROM FACE OF GWB TO FACE GWB U.N.O
11. FINAL KITCHEN LAYOUT T.B.D. BY OWNER
12.ALL EXISTING DIMENSIONS TO BE V.I.F

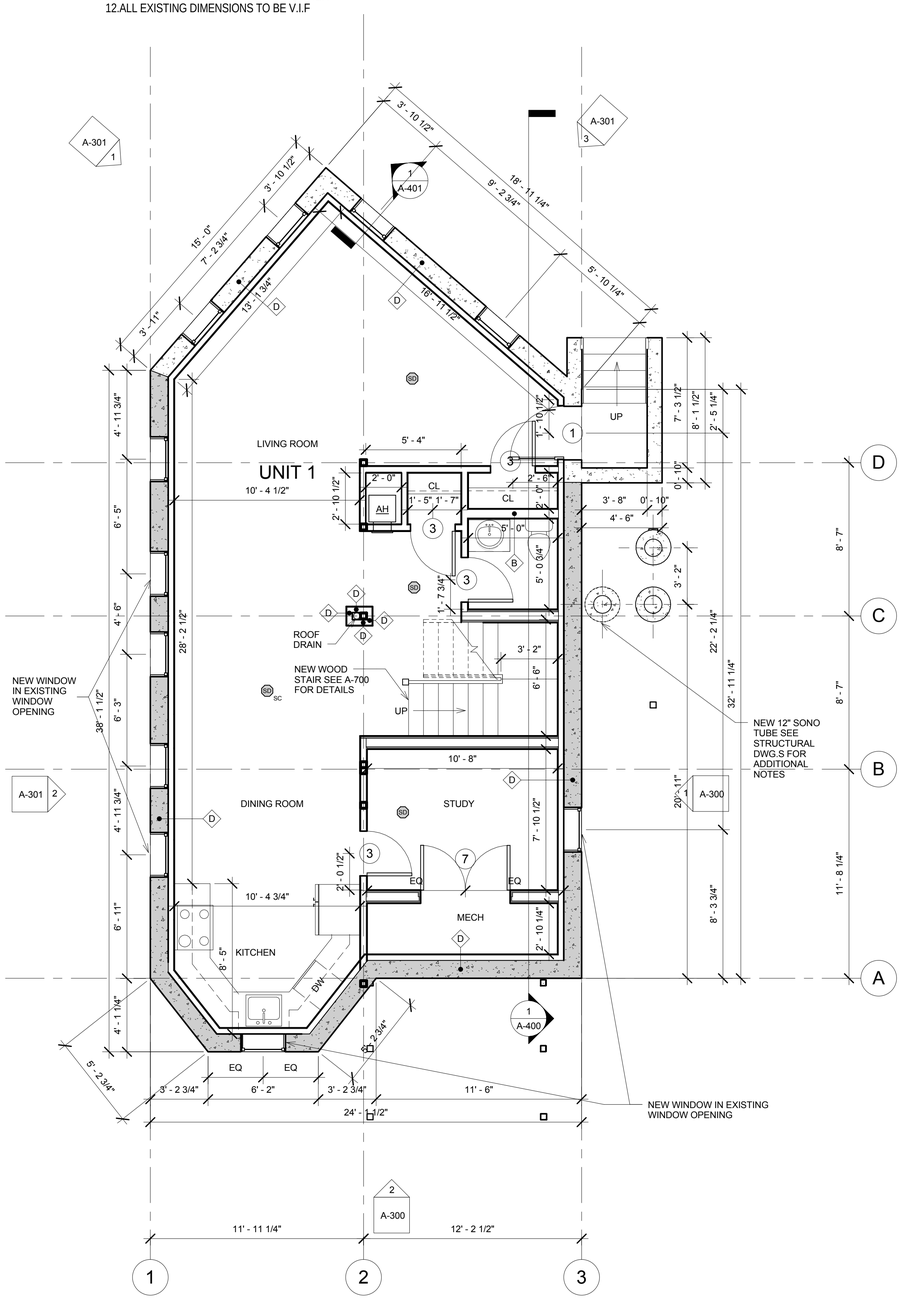

2 Basement
1/4" = 1'-0"

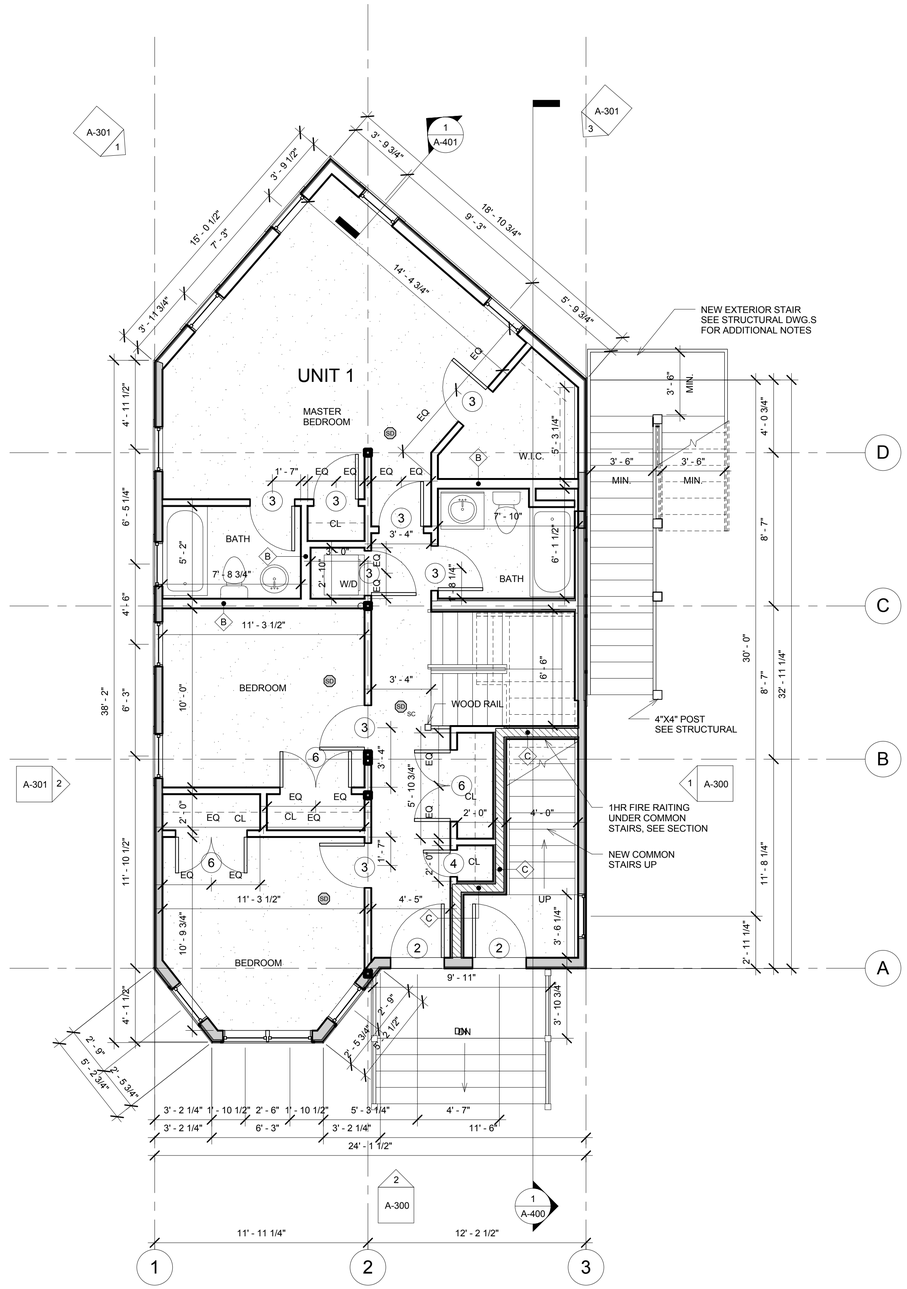

1 First Floor Level
1/4" = 1'-0"

PROJECT NAME

1108-1110 BROADWAY

PROJECT ADDRESS

1108-1110 BROADWAY, SOMERVILLE, MA

CLIENT

Sal Querusio

ARCHITECT

KHALSA DESIGN INC.

17 IVALOO STREET SUITE 400
SOMERVILLE, MA 02143
TELEPHONE: 617-591-8682 FAX: 617-591-2086

CONSULTANTS:

REGISTRATION

Project number	14026
Date	06-25-14
Drawn by	CC,NA,MT
Checked by	JSK
Scale	1/4" = 1'-0"

REVISIONS

No.	Description	Date

Basement & 1st Floor Plans

A-100

1108-1110 BROADWAY

G:\14\14026_dolan_1108-1110 Broadway\03 Drawings\01_ARCH\khalsa\2014-06-25-14026_1108-1110 Broadway_CD.rvt

6/25/2014 2:43:53 PM

LEGEND

- SD — SMOKE DETECTOR
- SD SC — SMOKE/CO DETECTOR
- EXISTING WALLS TO REMAIN
- NEW WALLS
- 1 HR DEMISING WALLS

GENERAL NOTES

1. ALL SMOKE ALARMS TO BE INTERCONNECTED AND HARD WIRED
2. KITCHEN CABINETS TO BE PURCHASED BY OWNER
3. ALL APPLIANCES TO BE PURCHASED BY OWNER
4. SEE EXTERIOR ELEVATIONS FOR WINDOW TYPES & CLADDING MATERIALS
5. UNLESS OTHERWISE NOTED ALL INTERIOR PARTITIONS ARE TYPE "A"
5. UNLESS OTHERWISE NOTED ALL NEW EXTERIOR PARTITIONS ARE TYPE "F"
5. UNLESS OTHERWISE NOTED ALL EXISTING EXTERIOR PARTITIONS ARE TYPE "G"
6. ALL INTERIOR FINISHES TO BE DETERMINED BY OWNER
7. MR GWB. BOARD TO BE USED IN ALL BATHROOMS AND KITCHENS
8. SEE A-800 FOR DOOR & WINDOW DETAILS
9. SEE A-910 FOR PARTITION TYPES
10. ALL INTERIOR DIMENSIONS ARE FROM FACE OF GWB TO FACE GWB U.N.O
11. FINAL KITCH LAYOUT T.B.D. BY OWNER

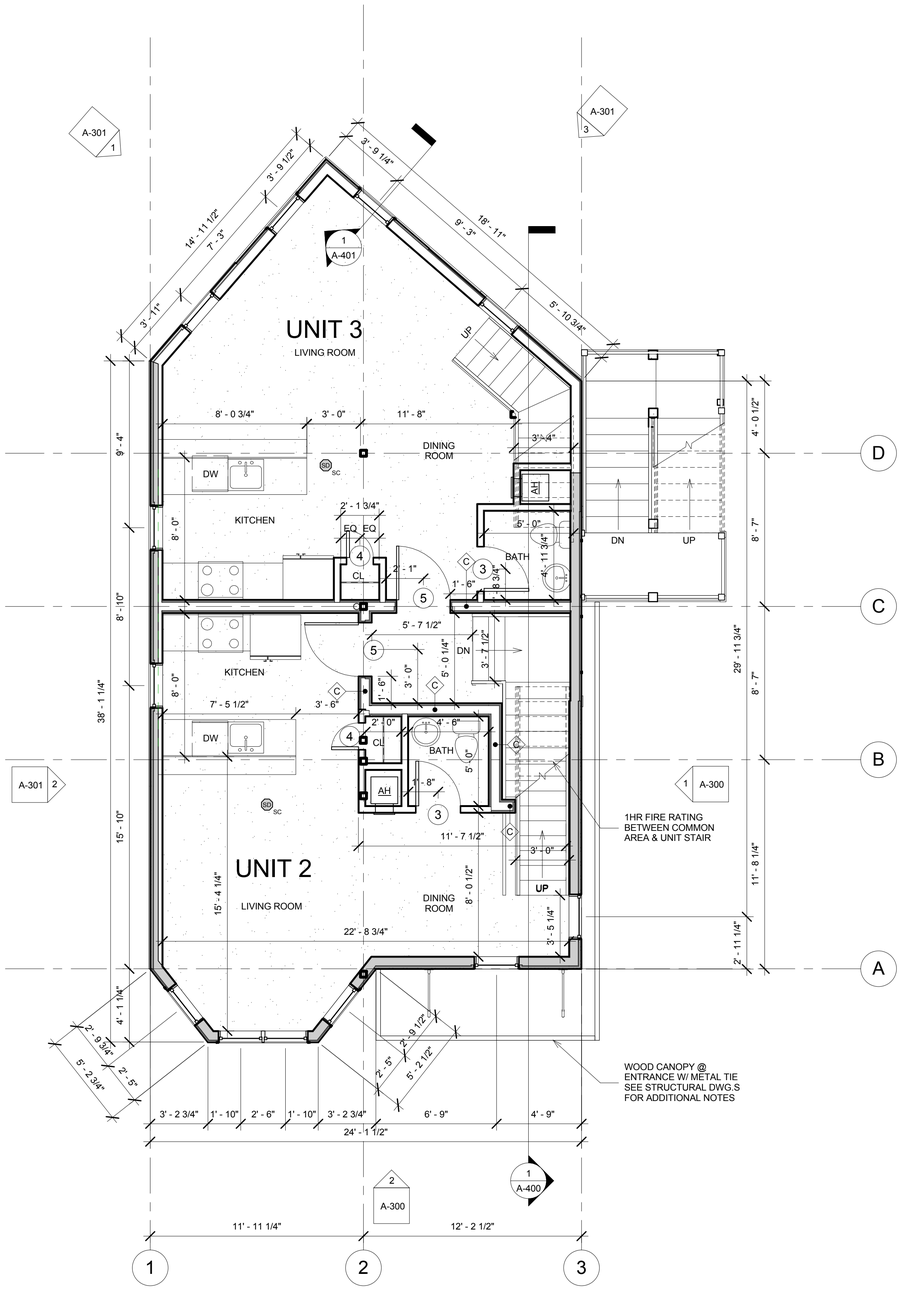

1 Second Floor Level
1/4" = 1'-0"

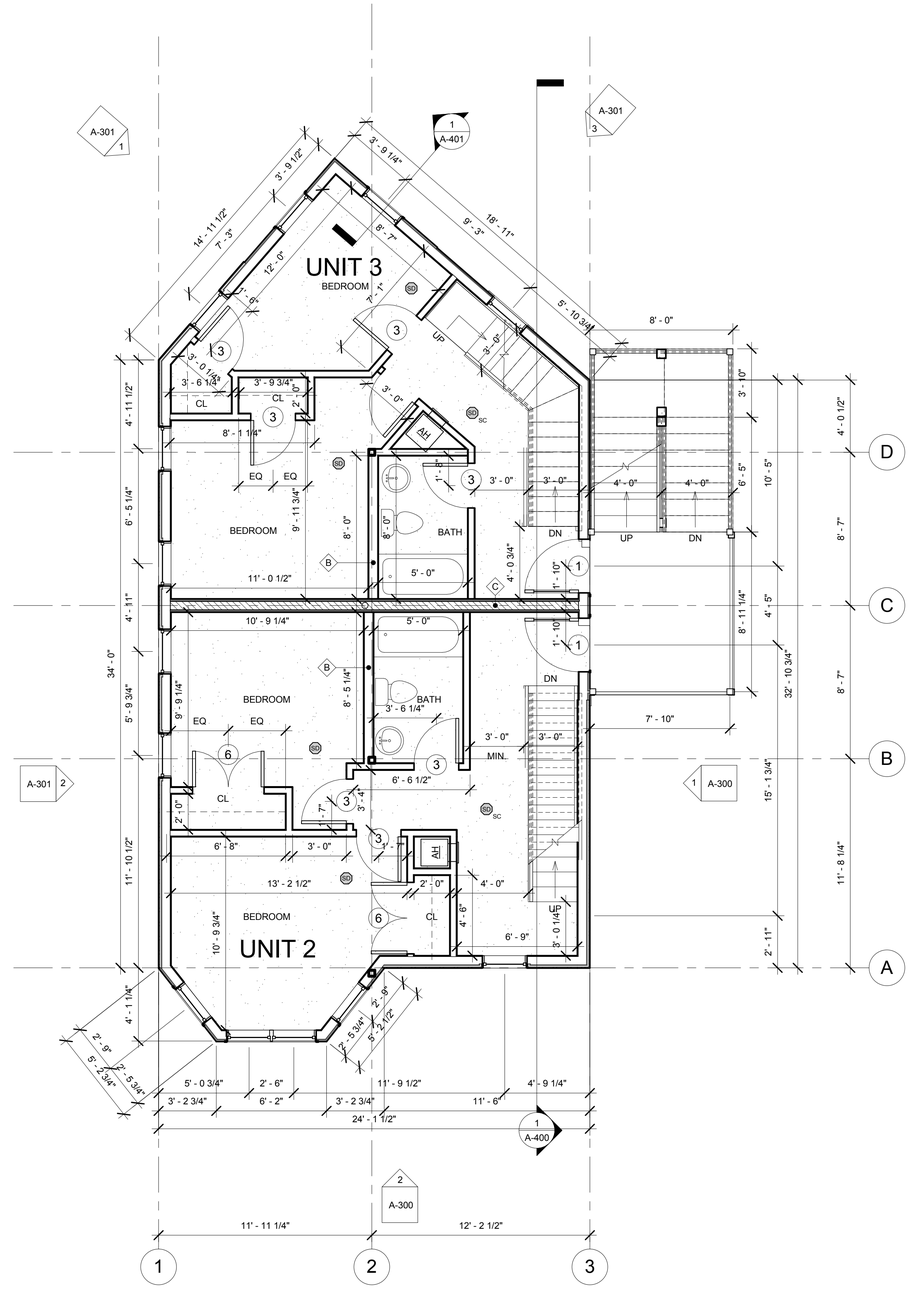

2 Third Floor Level
1/4" = 1'-0"

PROJECT NAME

1108-1110 BROADWAY

PROJECT ADDRESS

1108-1110 BROADWAY, SOMERVILLE, MA

CLIENT

Sal Querusio

ARCHITECT

KHALSA DESIGN INC.

17 IVALOO STREET SUITE 400
SOMERVILLE, MA 02143
TELEPHONE: 617-591-8682 FAX: 617-591-2086

CONSULTANTS:

REGISTRATION

Project number	14026
Date	06-25-14
Drawn by	CC,NA,MT
Checked by	JSK
Scale	1/4" = 1'-0"

REVISIONS

No.	Description	Date

2nd& 3rd Floor Plans

A-101

1108-1110 BROADWAY

G:\14\14026_dolan_1108-1110 Broadway\03 Drawings\01_ARCH\nisha\2014-06-25-14026_1108-1110 Broadway_CD.rvt

6/25/2014 2:43:58 PM

LEGEND

- SD — SMOKE DETECTOR
- SD SC — SMOKE/CO DETECTOR
- EXISTING WALLS TO REMAIN
- NEW WALLS
- 1 HR DEMISING WALLS

GENERAL NOTES

1. ALL SMOKE ALARMS TO BE INTERCONNECTED AND HARD WIRED
2. KITCHEN CABINETS TO BE PURCHASED BY OWNER
3. ALL APPLIANCES TO BE PURCHASED BY OWNER
4. SEE EXTERIOR ELEVATIONS FOR WINDOW TYPES & CLADDING MATERIALS
5. UNLESS OTHERWISE NOTED ALL INTERIOR PARTITIONS ARE TYPE "A"
5. UNLESS OTHERWISE NOTED ALL NEW EXTERIOR PARTITIONS ARE TYPE "F"
5. UNLESS OTHERWISE NOTED ALL EXISTING EXTERIOR PARTITIONS ARE TYPE "G"
6. ALL INTERIOR FINISHES TO BE DETERMINED BY OWNER
7. MR GWB. BOARD TO BE USED IN ALL BATHROOMS AND KITCHENS
8. SEE A-800 FOR DOOR & WINDOW DETAILS
9. SEE A-910 FOR PARTITION TYPES
10. ALL INTERIOR DIMENSIONS ARE FROM FACE OF GWB TO FACE GWB U.N.O
11. FINAL KITCHEN LAYOUT T.B.D. BY OWNER

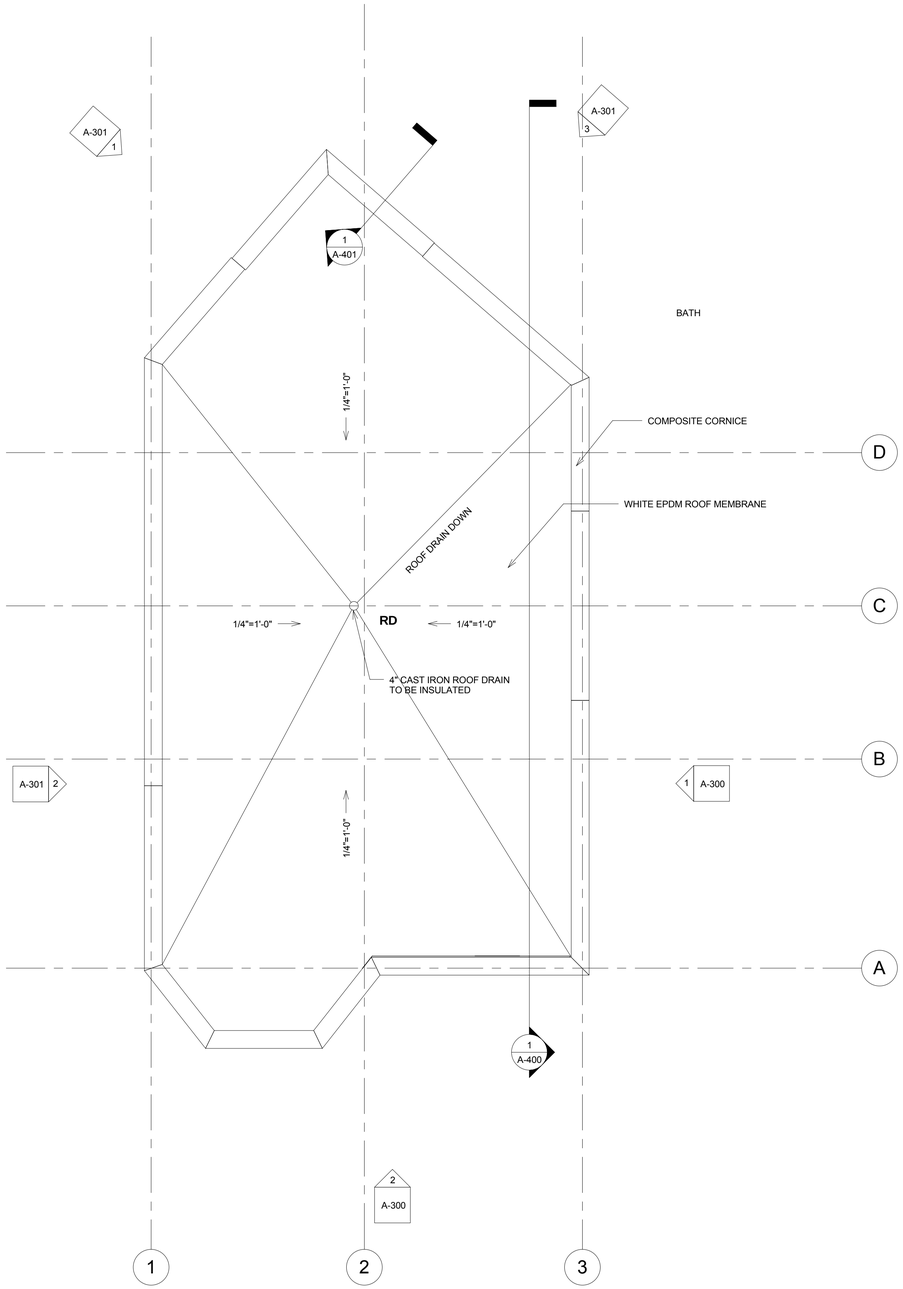

2 Roof
1/4" = 1'-0"

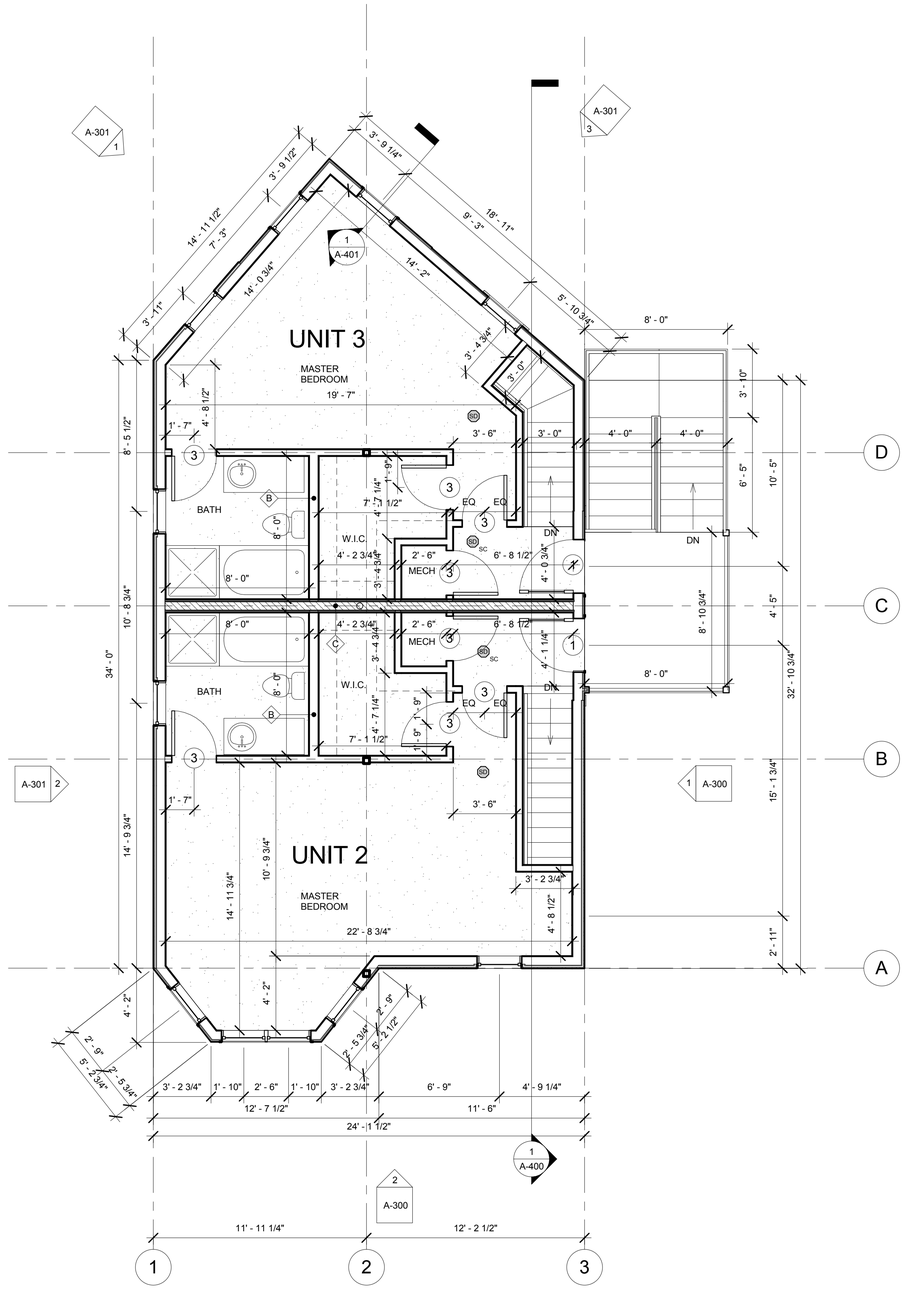

1 Fourth Floor Level
1/4" = 1'-0"

PROJECT NAME

1108-1110 BROADWAY

PROJECT ADDRESS

1108-1110 BROADWAY, SOMERVILLE, MA

CLIENT

Sal Querusio

ARCHITECT

KHALSA DESIGN INC.

17 IVALOO STREET SUITE 400
SOMERVILLE, MA 02143
TELEPHONE: 617-591-8682 FAX: 617-591-2086

CONSULTANTS:

REGISTRATION

Project number	14026
Date	06-25-14
Drawn by	CC,NA,MT
Checked by	KDI
Scale	1/4" = 1'-0"

REVISIONS

No.	Description	Date

4th Floor & Roof Plan

A-102

1108-1110 BROADWAY

G:\14114026_dolan_1108-1110 Broadway\03 Drawings\01_ARCH\khalsha\2014-06-25-14026_1108-1110 Broadway_CD.rvt

6/25/2014 2:44:00 PM

2 Front Elevation
1/4" = 1'-0"

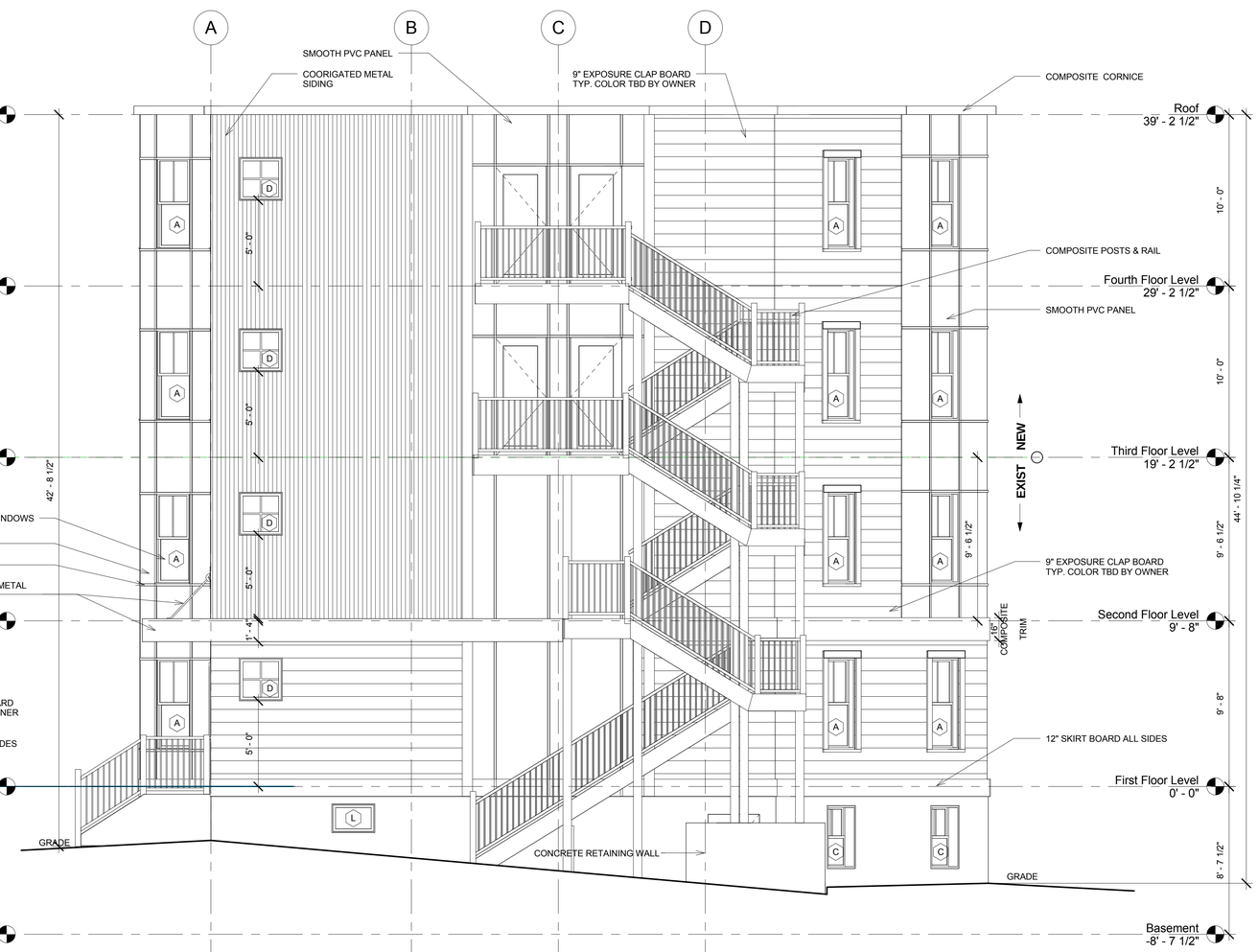

1 Right Elevation
1/4" = 1'-0"

PROJECT NAME

1108-1110 BROADWAY

PROJECT ADDRESS

1108-1110 BROADWAY, SOMERVILLE, MA

CLIENT

Sal Querusio

ARCHITECT

KHALSA DESIGN INC.

17 IVALOO STREET SUITE 400
SOMERVILLE, MA 02143
TELEPHONE: 617-591-8682 FAX: 617-591-2086

CONSULTANTS:

REGISTRATION

Project number	14026
Date	06-25-14
Drawn by	CC,NA,MT
Checked by	JSK
Scale	1/4" = 1'-0"

REVISIONS

No.	Description	Date

Building Elevations

A-300

1108-1110 BROADWAY

G:\14\14026_dolan_1108-1110 Broadway\03 Drawings\01_ARCH\khalsa\2014-06-25-14026_1108-1110 Broadway_CD.rvt

6/25/2014 2:44:03 PM

3 Elevation 4 - a
1/4" = 1'-0"

1 Elevation 5 - a
1/4" = 1'-0"

2 Left Elevation
1/4" = 1'-0"

PROJECT NAME

1108-1110 BROADWAY

PROJECT ADDRESS

1108-1110 BROADWAY, SOMERVILLE, MA

CLIENT

Sal Querusio

ARCHITECT

KHALSA DESIGN INC.

17 IVALOO STREET SUITE 400
SOMERVILLE, MA 02143
TELEPHONE: 617-591-8682 FAX: 617-591-2086

CONSULTANTS:

REGISTRATION

Project number	14026
Date	06-25-14
Drawn by	CC,NA,MT
Checked by	JSK
Scale	1/4" = 1'-0"

REVISIONS

No.	Description	Date

Building Elevations

A-301

1108-1110 BROADWAY

G:\14\14026_dolan_1108-1110 Broadway\03 Drawings\01_ARCH\khalsa\2014-06-25-14026_1108-1110 Broadway_CD.rvt

6/25/2014 2:44:05 PM

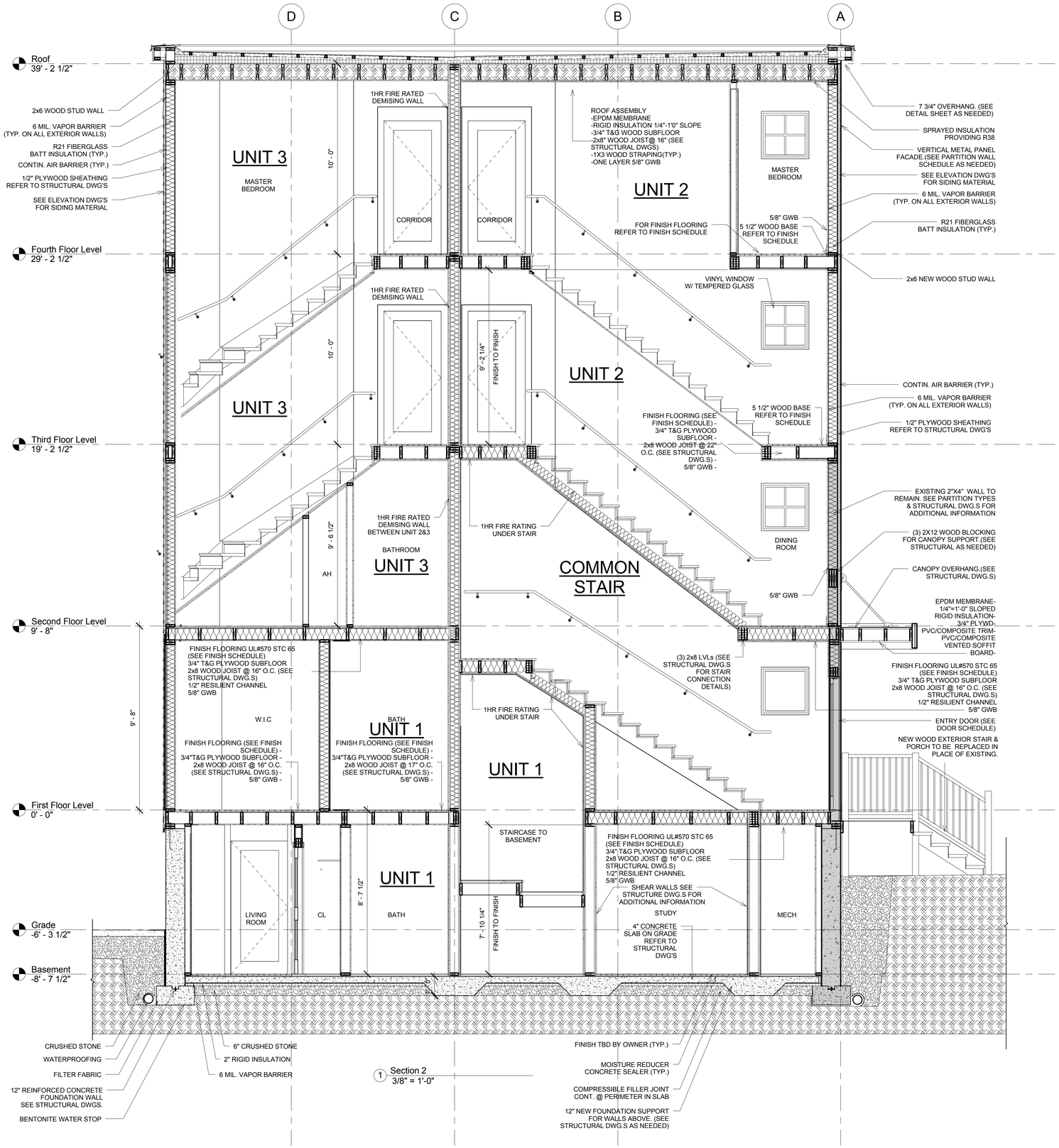

1 Section 2
3/8" = 1'-0"

NOTE:
ELEVATION NOTATIONS ARE NOT
TIED INTO SURVEY DATUM

PROJECT NAME

1108-1110 BROADWAY

PROJECT ADDRESS

1108-1110 BROADWAY,
SOMERVILLE, MA

CLIENT

Sal Querusio

ARCHITECT

KHALSA DESIGN INC.

17 IVALOO STREET SUITE 400
SOMERVILLE, MA 02143
TELEPHONE: 617-591-8682 FAX: 617-591-2086

CONSULTANTS:

REGISTRATION

Project number	14026
Date	06-25-14
Drawn by	CC,NA,MT
Checked by	JSK
Scale	3/8" = 1'-0"

REVISIONS

No.	Description	Date

Building Section

A-400

1108-1110 BROADWAY

G:\14014026_dolan_1108-1110 Broadway\03 Drawings\01_ARCH\nusha\2014-06-25-14026_1108-1110 Broadway_CD.rvt

6/25/2014 2:44:14 PM

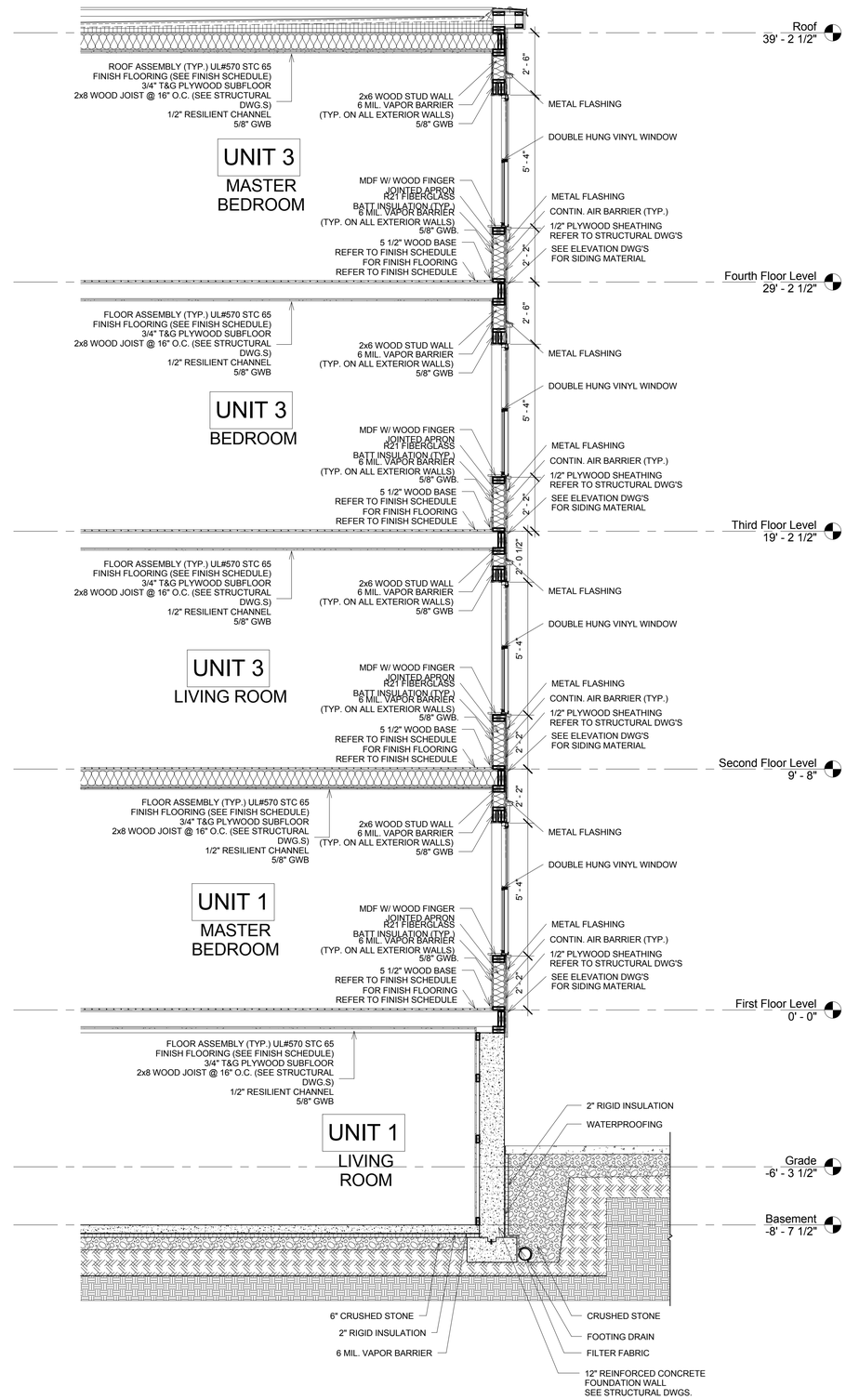

1 Section 3
3/8" = 1'-0"

PROJECT NAME

1108-1110 BROADWAY

PROJECT ADDRESS

1108-1110 BROADWAY,
SOMERVILLE, MA

CLIENT

Sal Querusio

ARCHITECT

KHALSA DESIGN INC.

17 IVALOO STREET SUITE 400
SOMERVILLE, MA 02143
TELEPHONE: 617-591-8682 FAX: 617-591-2086

CONSULTANTS:

REGISTRATION

Project number	14026
Date	06-25-14
Drawn by	MT
Checked by	JSK
Scale	3/8" = 1'-0"

REVISIONS

No.	Description	Date

Wall Section

A-401

1108-1110 BROADWAY

G:\14\14026_dolan_1108-1110 Broadway\03 Drawings\01_ARCH\niusha\2014-06-25-14026_1108-1110 Broadway_CD.rvt

6/25/2014 2:44:17 PM

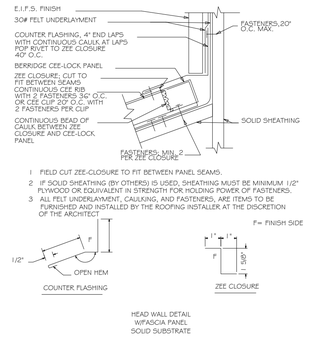

1 CEE-RIB EXPANSION JOINT
A-500 Scale:N.T.S.

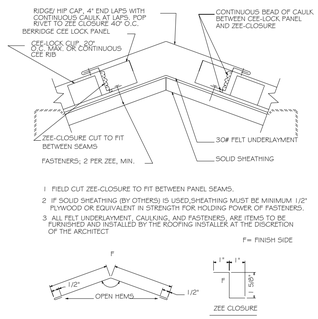

2 RIDGE/HIP DETAIL
A-500 Scale:N.T.S.

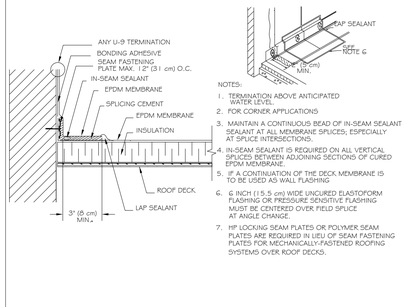

4 PARAPET/CURB CURED EPDM
A-500 Scale:N.T.S.

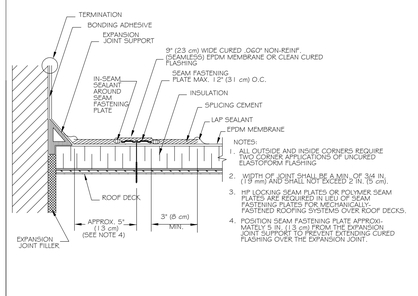

5 DECK TO WALL
A-500 Scale:N.T.S.

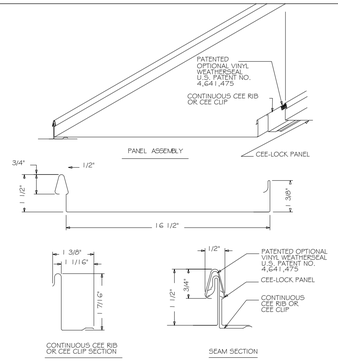

6 PANEL OVERVIEW
A-500 Scale:N.T.S.

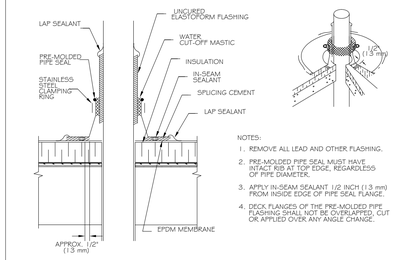

9 PRE-MOLDED VENT PIPE & EXTENSION
A-500 Scale:N.T.S.

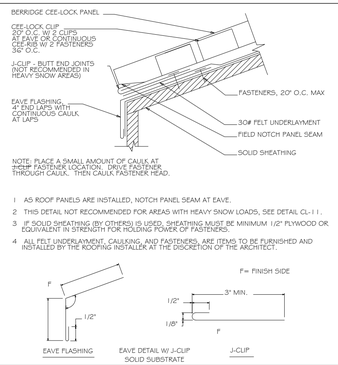

11 EAVE DETAIL W/ J-CLIP
A-500 Scale:N.T.S.

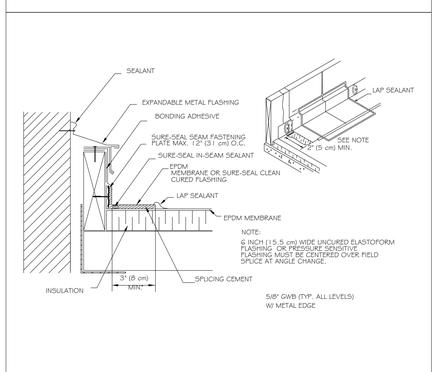

15 SHEAR AND EXPANSION COVER
A-500 Scale:N.T.S.

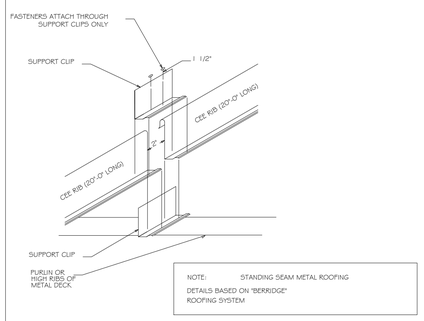

16 CEE-RIB EXPANSION JOINT
A-500 Scale:N.T.S.

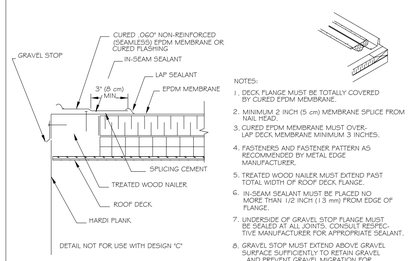

17 METAL EDGE TERMINATION
A-500 Scale:N.T.S.

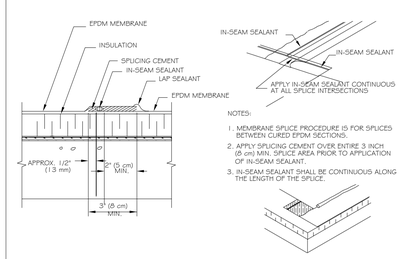

20 MEMBRANE SPLICE
A-500 Scale:N.T.S.

PROJECT NAME

1108-1110 BROADWAY

PROJECT ADDRESS

1108-1110 BROADWAY, SOMERVILLE, MA

CLIENT

Sal Querusio

ARCHITECT

KHALSA DESIGN INC.

17 IVALOO STREET SUITE 400
SOMERVILLE, MA 02143
TELEPHONE: 617-591-8682 FAX: 617-591-2086

CONSULTANTS:

REGISTRATION

Project number	14026
Date	06-25-14
Drawn by	CC,NA,MT
Checked by	JSK
Scale	1/8" = 1'-0"

REVISIONS

No.	Description	Date

Roof Details

A-500

1108-1110 BROADWAY

G:\14014026_dolan_1108-1110 Broadway\03 Drawings\01_ARCH\khalsha\2014-06-25-14026_1108-1110 Broadway_CD.rvt

6/25/2014 2:44:19 PM

12 A-700 NOT USED
SCALE: 1" = 1'-0"

9 A-700 NOT USED
SCALE: 1" = 1'-0"

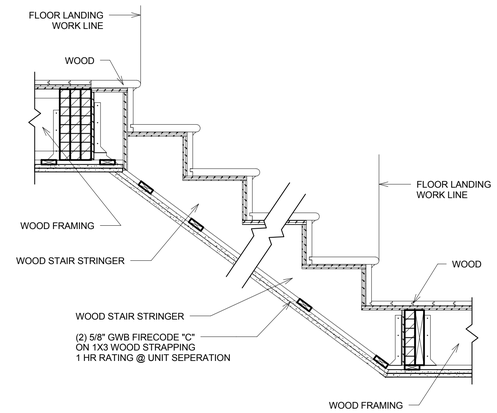

6 A-700 TYPICAL STAIR SECTION
SCALE: 1" = 1'-0"

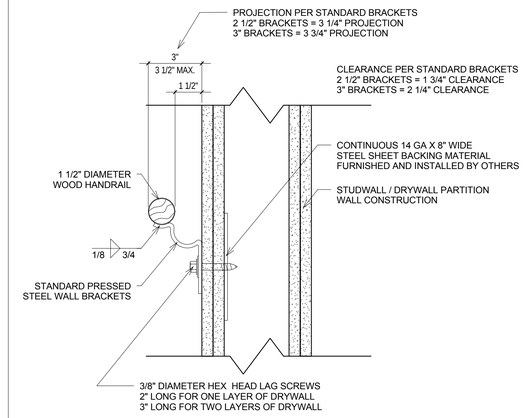

3 A-700 WALL HANDRAIL BRACKET MOUNTING DETAIL
SCALE: 3" = 1'-0"

11 A-700 NOT USED
SCALE: 1" = 1'-0"

8 A-700 NOT USED
SCALE: 1" = 1'-0"

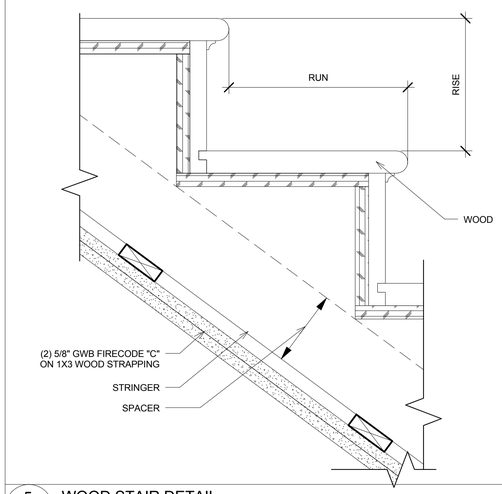

5 A-700 WOOD STAIR DETAIL
SCALE: 3" = 1'-0"

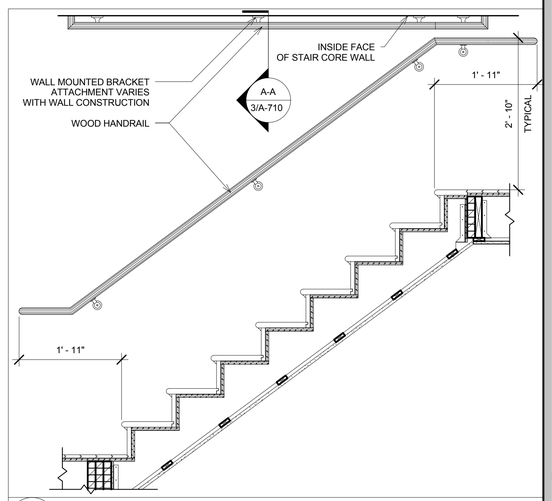

2 A-700 TYPICAL WALL RAIL
SCALE: 3/4" = 1'-0"

10 A-700 NOT USED
SCALE: 1" = 1'-0"

7 A-700 NOT USED
SCALE: 1" = 1'-0"

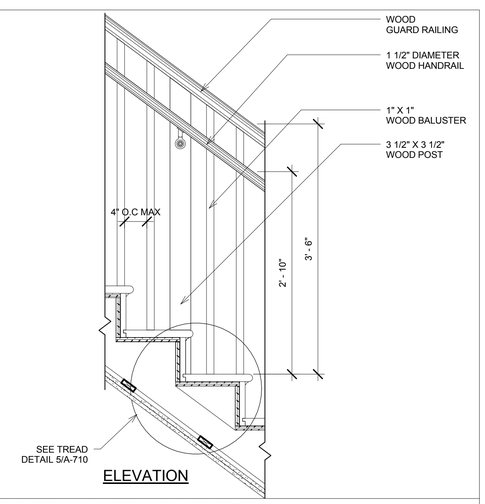

4 A-700 PICKET RAIL INTERMEDIATE POST
SCALE: 1" = 1'-0"

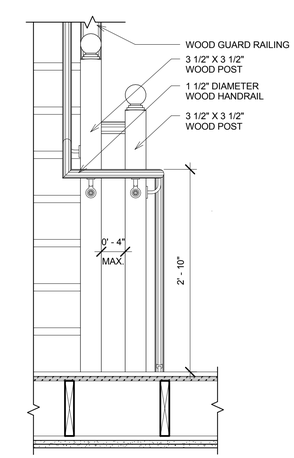

1 A-700 PICKET RAIL TRANS. BETWEEN LANDINGS
SCALE: 1" = 1'-0"

PROJECT NAME

1108-1110 BROADWAY

PROJECT ADDRESS

1108-1110 BROADWAY, SOMERVILLE, MA

CLIENT

Sal Querusio

ARCHITECT

KHALSA DESIGN INC.

17 IVALOO STREET SUITE 400
SOMERVILLE, MA 02143
TELEPHONE: 617-591-8682 FAX: 617-591-2086

CONSULTANTS:

REGISTRATION

Project number	14026
Date	06-25-14
Drawn by	CC,NA,MT
Checked by	JSK
Scale	As indicated

REVISIONS

No.	Description	Date

Stair Details

A-700

1108-1110 BROADWAY

G:\14114026_dolan_1108-1110 Broadway\03 Drawings\01_ARCH\nusha\2014-06-25-14026_1108-1110 Broadway_CD.rvt

6/25/2014 2:44:21 PM

10 Not Used
A-800 Scale: 3"=1'-0"

7 Not Used
A-800 Scale: 3"=1'-0"

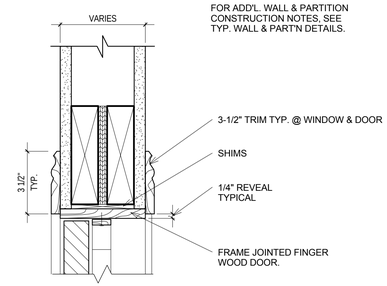

4 DOOR HEAD DETAIL (WOOD FRAME)
A-800 Scale: 3"=1'-0"

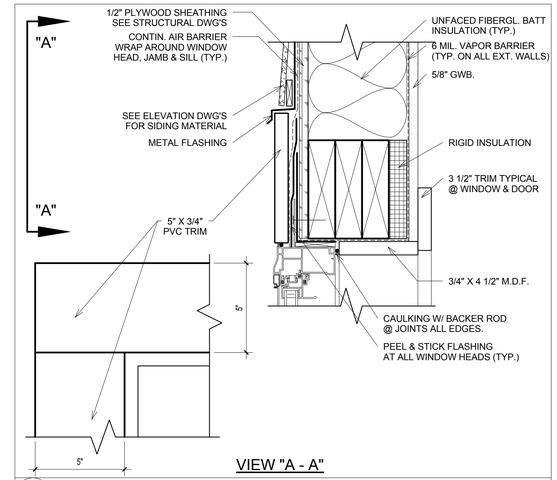

1 WINDOW HEAD DETAIL (TYP.)
A-800 Scale: 3"=1'-0"

11 Not Used
A-800 Scale: 3"=1'-0"

8 Not Used
A-800 Scale: 3"=1'-0"

5 Not Used
A-800 Scale: 3"=1'-0"

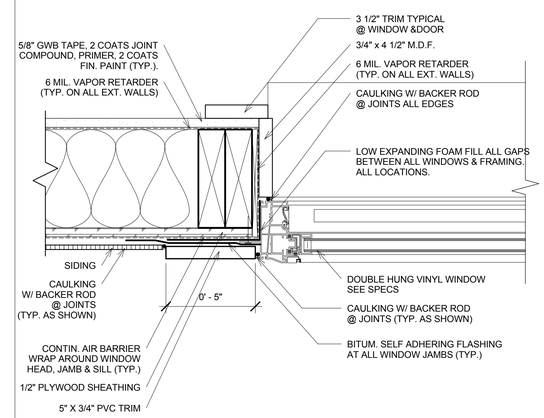

2 WINDOW JAMB DETAIL (TYP.)
A-800 Scale: 3"=1'-0"

12 Not Used
A-800 Scale: 3"=1'-0"

9 Not Used
A-800 Scale: 3"=1'-0"

6 Not Used
A-800 Scale: 3"=1'-0"

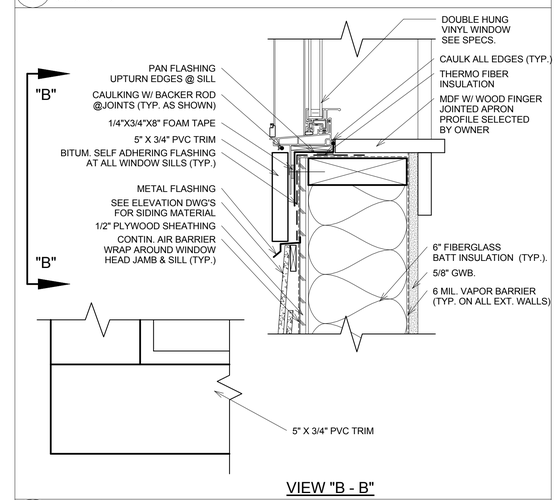

3 WINDOW SILL DETAIL (TYP.) AT ALL VINYL WINDOW SILL
A-800 Scale: 3"=1'-0"

PROJECT NAME

1108-1110 BROADWAY

PROJECT ADDRESS

1108-1110 BROADWAY, SOMERVILLE, MA

CLIENT

Sal Querusio

ARCHITECT

KHALSA DESIGN INC.

17 IVALOO STREET SUITE 400
SOMERVILLE, MA 02143
TELEPHONE: 617-591-8682 FAX: 617-591-2086

CONSULTANTS:

REGISTRATION

Project number	14026
Date	06-25-14
Drawn by	CC,NA,MT
Checked by	JSK
Scale	3" = 1'-0"

REVISIONS

No.	Description	Date

Door & Window Details

A-800

1108-1110 BROADWAY

G:\14114026_dolan_1108-1110 Broadway\03 Drawings\01_ARCH\nusha\2014-06-25-14026_1108-1110 Broadway_CD.rvt

6/25/2014 2:44:22 PM

Window Schedule1									
	Rough Opening					Detail			
Type Mark	Width	Height	Type	Material	Finish	Head	Jamb	Sill	Comments
A	2' - 6"	5' - 4"	Double Hung	Vinyl		1/A-801	2/A-801	3/A-801	2 over 1
B	2' - 6"	1' - 8"	Awning	Vinyl		1/A-801	2/A-801	3/A-801	
C	2' - 6"	3' - 8"	Double Hung	Vinyl		1/A-801	2/A-801	3/A-801	2 over 1
D	2' - 6"	2' - 6"	Casement	Vinyl		1/A-801	2/A-801	3/A-801	

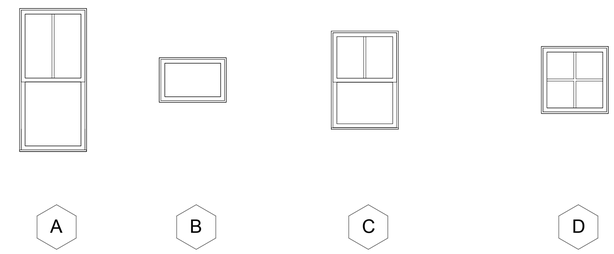

Door Schedule1						
					Details	
Door Type	Door Size	Operation	Style	Fire Rating	Head	Comments
1	36" x 84"	EXTERIOR DOOR	ENTRY	1hr		
2	36" x 84"	UNIT ENTRY DOOR	ENTRY	1hr		
3	30" x 80"	BEDROOM/BATH/CL				
4	18" x 80"	CLOSET	SINGLE TWO PANEL		4/A-801	
5	36" x 84"	UNIT ENTRY	SINGLE TWO PANEL	1hr	4/A-801	
6	48" x 82"	CLOSET	DOUBLE TWO PANEL		4/A-801	
7	60" x 82"	CLOSET	DOUBLE		4/A-801	

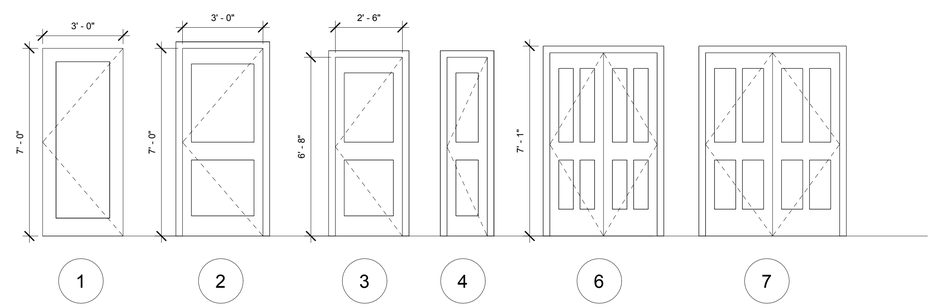

PROJECT NAME

1108-1110 BROADWAY

PROJECT ADDRESS

1108-1110 BROADWAY, SOMERVILLE, MA

CLIENT

Sal Querusio

ARCHITECT

KHALSA DESIGN INC.

17 IVALOO STREET SUITE 400
SOMERVILLE, MA 02143

TELEPHONE: 617-591-8682 FAX: 617-591-2086

CONSULTANTS:

REGISTRATION

Project number	14026
Date	06-25-14
Drawn by	CC,NA,MT
Checked by	JSK
Scale	3/8" = 1'-0"

REVISIONS

No.	Description	Date

Door & Window Schedules

A-900

1108-1110 BROADWAY

G:\14\14026_dolan_1108-1110 Broadway\03 Drawings\01_ARCH\khalsa\2014-06-25-14026_1108-1110 Broadway_CD.rvt

6/25/2014 2:44:23 PM

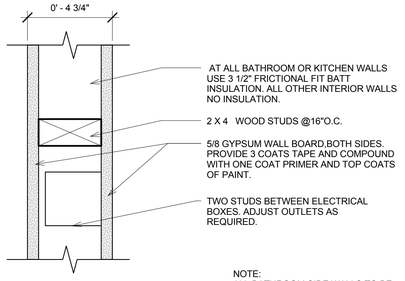

A Typical Wood Stud Interior Partition

A-910 Scale= 3" = 1'-0"

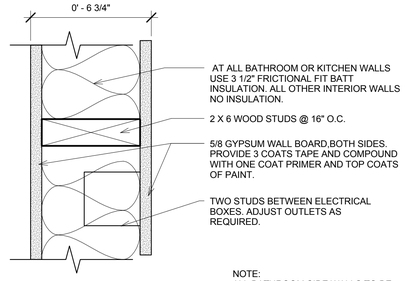

B Typical Interior Plumbing Wall

A-910 Scale= 3" = 1'-0" GA# - WP 3514 (1 h) w/STC 35 to 39

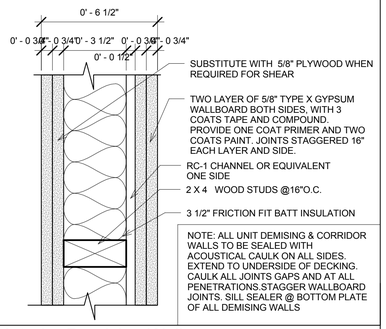

C Interior Demising Wall

A-910 Scale= 3" = 1'-0" UL # U334 (2hr) w/STC 59

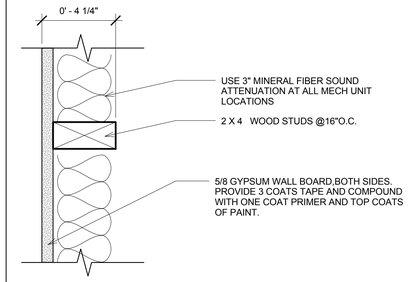

D Wall W/Finish One Side

A-910 Scale= 3" = 1'-0"

E Not Used

A-910

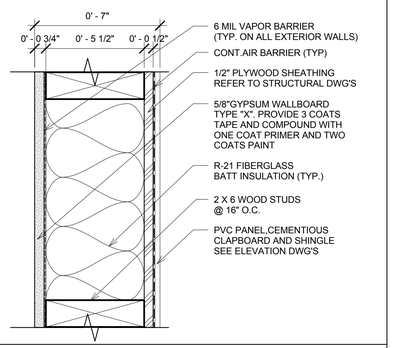

F Typical Exterior Wall

A-910 Scale= 3" = 1'-0" 1 hr RATED EXTERIOR WALL ANSI /UL # 263# 356

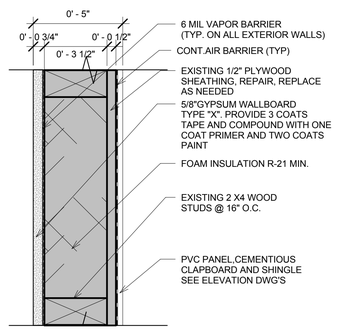

G Existing Exterior Wall

A-910 Scale= 3" = 1'-0"

H Exterior Wall @ Mansard Roof - No PVC/PLY

A-910 Scale= 3" = 1'-0" Not Rated

J Not Used

A-910 Scale= 3" = 1'-0"

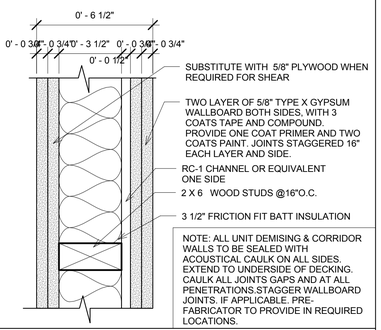

K Interior Demising Wall-Shear

A-910 Scale= 3" = 1'-0" UL # U334 (2hr) w/STC 59

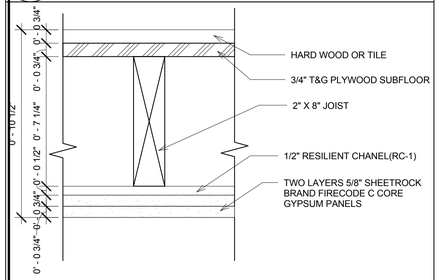

L Floor/ Ceiling Assembly- Unit Interior

A-910 Scale= 3" = 1'-0" 1 hr RATED EXTERIOR WALL ANSI /UL # 570. STC RATING OF 65

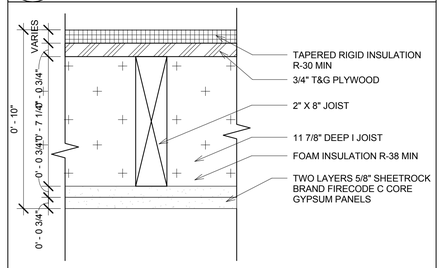

M Roof/ Ceiling Assembly

A-910 Scale= 3" = 1'-0" 1 hr RATED EXTERIOR WALL ANSI /UL # 570. STC RATING OF 65

N Not Used

A-910 Scale= 3" = 1'-0"

P Not Used

A-910 Scale= 3" = 1'-0"

Q Not Used

A-910 Scale= 3" = 1'-0"

R Not Used

A-910 Scale= 3" = 1'-0"

S Not Used

A-910 Scale= 3" = 1'-0"

T Not Used

A-910 Scale= 3" = 1'-0"

U Not Used

A-910 Scale= 3" = 1'-0" UL# 514 GA# FC5107 (1hr) w/STC 55 to 59 & IIC 73

V Not Used

A-910 Scale= 3" = 1'-0"

PROJECT NAME

1108-1110 BROADWAY

PROJECT ADDRESS

1108-1110 BROADWAY, SOMERVILLE, MA

CLIENT

Sal Querusio

ARCHITECT

KHALSA DESIGN INC.

17 IVALOO STREET SUITE 400
SOMERVILLE, MA 02143
TELEPHONE: 617-591-8682 FAX: 617-591-2086

CONSULTANTS:

REGISTRATION

Project number	14026
Date	06-25-14
Drawn by	CC,NA,MT
Checked by	JSK
Scale	3" = 1'-0"

REVISIONS

No.	Description	Date

Partition Types

A-910

1108-1110 BROADWAY

G:\14\14026_dolan_1108-1110 Broadway\03 Drawings\01_ARCH\nusha\2014-06-25-14026_1108-1110 Broadway_CD.rvt

6/25/2014 2:44:31 PM

GENERAL:

G–1 Structural drawings shall be used in conjunction with the architectural, mechanical, electrical and shop drawings, and specifications.

G–2 Unless otherwise noted, sections, details, notes, materials, and methods shown on any drawings are to be considered typical for all similar conditions.

G–3 In the event of a conflict between plans, specifications, and details, the Structural Engineer shall be notified immediately for clarification.

G–4 All dimensions, elevations, and conditions must be verified in the field by the Contractor. Any discrepancies shall be brought to the attention of the Structural Engineer before proceeding with the affected portion of the work. Any discrepancies between these drawings and as–built conditions shall be brought to the attention of the Structural Engineer before proceeding with any work.

G–5 The structure has been designed to be self–supporting and stable after the work shown on these drawings has been completed. The Contractor shall be responsible for the stability of the structure prior to the completion of work including but not limited to, jobsite safety, all shoring, bracing, erection methods, erection sequence, and forms required during construction. Temporary supports required for stability during all intermediate stages of construction shall be designed, furnished, and installed by the Contractor.

G–6 The Contractor shall provide and maintain shoring and bracing supports as required to preserve stability and prevent movement, settlement, or collapse of adjacent construction to remain.

G–7 Shop drawings for reinforcing steel (including accessories), structural steel, and wood framing shall be submitted to the Structural Engineer. Fabrication shall not proceed until a stamped review is received. Erection shall be executed from final reviewed shop drawings only.

G–8 These plans were prepared under the supervision of a licensed professional engineer. TFMoran Inc. assumes no liability as a result of any changes or non–conformance with these plans except upon the written approval of the Engineer of Record.

G–9 TFMoran Inc. assumes no liability for work performed without an acceptable program of testing and inspection as approved by the Engineer of Record.

G–10 Reproduction of structural drawings for shop drawings is not permitted. Electronic drawing files will not be provided to the Contractor unless a transfer agreement has been completed between the Structural Engineer and the Contractor.

G–11 All work shall comply with the building codes referenced on these drawings.

G–12 Do not scale drawings. Contact the Architect or Structural Engineer for dimensions not specifically shown.

CODE:

8th Edition Massachusetts Base Code, which is the 2009 International Building Code, as amended, altered, or deleted by the provisions of the 8th Edition Massachusetts amendments (780 CMR).

DESIGN LIVE LOADS:

D–1 UNIFORM FLOOR LIVE LOADS:

Residential:	40psf
Stairs (public):	100psf
Stairs (with in units)	40psf
2,000 lbs	

D–2 ROOF SNOW LOAD:

Occupancy II
Ground Snow Load, Pg : 31 psf
Snow Load Importance Factor, Is: 1.0
Snow Exposure Factor, Ce: 1.0
Thermal Factor, Ct: 1.1
Flat Roof Snow Load, Pf: 31 psf
Drifting, sliding, and unbalanced snow loads: Per ASCE–7
Rain loads: Per ASCE–7
Roof live load: 20 psf MIN

D–3 WIND DESIGN DATA:

Wind loads have been determined using ASCE–7 Method 1 Simplified Procedure.
Occupancy II
Basic Wind Speed (3 second gust), V: 105 mph
Wind Importance Factor, Iw: 1.0
Wind Exposure Category: B
Internal Pressure Coefficient +/–0.18
Components and Cladding Design Wind Pressure:

Zone Per ASCE–7	MAX Positive (20 sf)	MAX Negative (20 sf)
1	9 psf	–21.7 psf
2	9 psf	–33.4 psf
3	9 psf	–46.5 psf
4	21.2 psf	–23.1 psf
5	21.2 psf	–27.4 psf

D–4 EARTHQUAKE DESIGN DATA:

Occupancy II
Seismic Importance Factor, Ie: 1.0
0.2s Mapped Spectral Response Acceleration, Ss: 0.280g
1.0s Mapped Spectral Response Acceleration, S1: 0.069
0.2s Spectral Response Coefficient, Sds: 0.294g
1.0s Spectral Response Coefficient, Sd1: 0.110g
Site Class: D
Seismic Design Category: B
Basic Seismic–Force–Resisting System: Wood structural panels rated for shear resistance
Analysis Procedure: Equivalent Lateral Force
Response Modification Factor, R: 6.5
Seismic Response Coefficient, Cs: 0.045
Deflection Amplification Factor, Cd: 4
Design Base Shear: 9 kips

D–5 Other Loads:

Retaining Walls
Lateral Equivalent Fluid Pressure: 60 pcf
Vertical Live Load Surcharge: 31 psf
Guardrails
Top Rail Concentrated Load: 200 lbs
Top Rail Uniform Load: 50 plf]

Copyright 2013 © Thomas F. Moran, Inc.
48 Constitution Drive, Bedford, N.H. 03110

All rights reserved. These plans and materials may not be copied, duplicated, replicated or otherwise reproduced in any form whatsoever without the prior written permission of Thomas F. Moran, Inc.

This plan is not effective unless signed by a duly authorized officer of Thomas F. Moran, Inc.

FOUNDATIONS:

F–1 Foundations consist of continuous and spread footings bearing on compacted structural fill placed on undisturbed natural soil having an assumed allowable bearing pressure of 3 kips per square foot. The general contractor is to provide verification of the assumed bearing capacity by a qualified individual prior to construction.

F–2 Unless otherwise noted, foundations shall be centered under supported members.

F–3 The bottom perimeter foundations shall be at least 4'–0" below finished grade.

F–4 See geotechnical investigation for excavation, backfill and compaction of structural fill procedures for all footings and slabs.

F–5 The bottom 3 inches of footing excavations shall be finished by hand shovel.

F–6 Bottom of excavations shall be inspected by the Engineer prior to the placement of concrete.

F–7 Place back–fill simultaneously on both sides of walls to the grades indicated.

F–8 For location of pipes and underslab conduit, see Site, Plumbing, Mechanical, and Electrical drawings. Provide caulked steel sleeves for all pipe penetrations at the foundation wall.

F–9 Provide formwork for all footings, walls, and piers. Earth formed foundations are not allowed.

F–10 Structural Fill shall be granular material meeting the following gradation requirements:

SIEVE SIZE	PERCENT PASSING BY WEIGHT
8"	100
6"	––
3"	70–100
2"	––
11/2"	––
1"	––
3/4"	45–95
No. 4	30–90
No. 10	25–80
No. 40	10–50
No. 200	0–12

F–11 Note: 3/4" maximum aggregate within 12" of slab on grade

CONCRETE:

C–1 Concrete shall be a mix designed for ultimate strength in accordance with the ACI 211.1 to achieve the following 28–day compressive strengths:

C–2 Foundation Walls, Column/Pier and Foundation Footings:
3,000 psi, Normal Weight
Max Slump = 4" ±1" (without plant added water reducer) 4" to 6" (with plant added water reducer)
Air Entrainment = 6% ±1%

C–5 Slab on grade:
3,500 psi, Normal Weight
Max Slump = 4" (without plant added water reducer) 4" to 6" (with plant added water reducer)

C–6 Site structures, outdoor stairs and slabs:
4,000 psi, Normal Weight
Max Slump = 3" (without plant added water reducer) 4"to 6" (with plant added water reducer)
Air Entrainment = 6% ±1%

C–7 Housekeeping pads:
4,000 psi, Normal Weight
Max Slump = 3" (without plant added water reducer)

C–8 Concrete shall not be cast in water or on frozen ground.

C–9 Concrete shall be place under the supervision of an American Concrete Institute qualified testing agency.

C–9 Top of foundation walls shall be smooth and level.

C–10 No pipe shall pass through concrete without permission of the Structural Engineer. Steel pipe sleeves shall be provided and spaced a minimum of three diameters apart.

C–11 Keys shall be 2"x4", with beveled sides, unless otherwise noted.

C–12 Horizontal construction joints shall be as indicated on the drawings. The architect shall approve all vertical construction joints. Construction joints shall be formed with a key, and reinforcing shall be lapped to develop the full tension capacity of the (smaller) bar.

C–13 Concrete walls shall have contraction or construction joints spaced no more than 60'–0" on center. Foundation wall contraction joints shall line up with masonry wall control joints, see Architectural drawings.

C–15 Exposed concrete shall be rubbed immediately after removal of forms.

C–16 Openings in concrete walls shall be located, sized and reinforced (with the exception of small openings and/or sleeves of a size that will not displace or interrupt the continuity of the reinforcing) as shown on respective details. Any alterations require approval of the structural engineer.

C–17 DO NOT BACKFILL FOUNDATION WALLS UNTIL THE CONCRETE HAS BEEN IN PLACE FOR SEVEN (7) DAYS AND ATTAINED 75% OF ITS DESIGN COMPRESSIVE STRENGTH.

REINFORCING STEEL:

RS–1 Reinforcing steel shall be deformed bars, free from loose rust and scale, and conforming to ASTM A615, Grade 60.

RS–2 Welded wire fabric shall conform to ASTM A185. Lap two squares at joints and tie at 3'–0" o.c. Furnish WWF in flat sheets.

RS–3 Welded wire fabric shall be supported on concrete bricks sp. at 24" o.c. each direction on grade. Welded wire fabric shall be supported on elevated deck with continuous bolsters located over joists and beams.

RS–4 Clear concrete cover over bars shall be as follows (see ACI 318 for conditions not noted):

Footings:	3 Inches (bottom),
2inches (top and side)	
Walls and Piers (exposed to earth):	2 Inches (side)
Walls and Piers (interior):	11/2" (side)
Elevated slabs:	1 inch (top)
Slab on grade:	2 Inches (top) U.O.N.

RS–5 Accessories shall have upturned legs and be plastic–dipped after fabrication. Accessories for reinforcing shall be in accordance with ACI current edition.

RS–6 Lap reinforcing to develop the full tension capacity of the (smaller) bar.

RS–7 No bars shall be cut or omitted in the field because of sleeves, duct openings or recesses. Bars may be moved aside without change in level with the prior approval of the Structural Engineer.

STRUCTURAL STEEL:

SS–1 Fabricate and erect structural steel in accordance with the "Specification for Structural Steel Buildings" and the "Code of Standard Practice" of the AISC. Welding shall conform to the requirements of the "Structural Welding Code" of the American Welding Society.

SS–2 Structural steel wide flange shapes shall conform to ASTM A992. Structural steel channels shall conform to ASTM A572, Grade 50. Structural tube columns shall be ASTM A500, Grade B. Structural steel plates, and angles shall conform to ASTM A36, unless otherwise noted.

SS–3 Do not splice structural steel members without written approval of the Structural Engineer.

SS–4 Bolted connections shall be made with three–quarter inch diameter high strength, ASTM A325–N bolts, unless otherwise noted. Connections at beam to column connections, moment connections, braced frames, column splices and hangers shall be made with three–quarters inch diameter A325–SC (Slip critical) bolts, unless otherwise noted.

SS–5 All beam to column connections shall be double angle connections.

SS–6 Shop connections, unless otherwise noted, shall be welded. Unless otherwise noted, beam connections shall provide shear capacity to support a reaction R equal to half the total uniform load capacity of the beam for given shape, span and steel specification (AISC) taking account for the effect of concentrated loads.

SS–9 Anchor bolts shall be ASTM F1554 Gr. 36 headed bolts of the diameters and dimensions detailed, unless otherwise noted on the drawings. Anchor bolts shall be set by template. High strength (HS) anchor bolts shall be ASTM A449 Gr. 55 headed bolts.

SS–10 Welding electrodes shall conform to AWS A5.1 E70XX series with proper rod to produce optimum weld (low hydrogen).

SS–11 Unless otherwise noted, bolted connections with slotted holes shall be field–welded with one–quarter inch fillet welds after final field adjustment.

SS–12 Provide 3/8" minimum fitted stiffener plates each side at beams' web framing over columns and at beams supporting columns above.

SS–13 Provide 1/4" thick leveling plate under all column base plates unless otherwise noted. Leveling plates shall be set and grouted prior to erecting columns.

SS–14 Provide all angles, plates, anchors, bolts, etc., shown on architectural drawings.

SS–15 Lintels for exterior masonry and structural steel exposed to weather shall be hot–dip galvanized according to ASTM A123.
SS–16 Repair all field welded connections on gavalnized members with cold galvanizing compound.

SS–17 All interior steel members in contact with soils shall be painted with bitumastic paint.

SS–16 Provide 4 x 4 x 1/4 slab support angle as required at columns where structural members do not frame in at all four sides.

SS–17 Steel Primer:

A. Architecturally exposed steel: Shop prime with Tnemec Series 90–1K97 Tneme–Zinc at 2.5 – 3.5 mils DFT. Intermediate coat of Tnemec Series 27 Typoxy at 2–3 mils DFT. Topcoat of Tnemec Series 73 and 2–3 mils DFT. Tnemec shall be used as the standard of quality and performance.

B. General Primer: Standard Alkyd Primer applied at 2.5 – 3.5 mil DFT shall be used as the standard of quality and performance. Color: grey

C. Primer for steel with fireproofing: Tnemec Series 394 Perime–Prime applied at 2.5 – 3.5 mils DFT shall be used as the standard of quality and performance.

SS–18 The Steel fabricator is responsible for the design and detailing of all connections including moment connections and beam and/or column stiffeners and doublers if required.

SS–19 The design of steel stairs, hand rails, and guard rails are the responsibility of the general contractor. All stairs must be designed by a registered professional engineer in the state in which the project is being constructed. Certification of this design should be provided with the shop drawings submittal for review by the engineer of record.

WOOD:

W–1 Work shall be in accordance with the American Wood Council, ANSI/AF&PA, "National Design Specification for Wood Construction 2005 (NDS)" including "Design Values for Wood Construction", National Forest Products Association.

W–2 New wood for structural use shall have a moisture content as specified in the "National Design Specification for Wood Construction."

W–3 Wood construction shall conform to IBC 2006 Chapter 23 and Section 2308 "Conventional Light–frame Construction."

W–4 Framing for walls and joists shall be Spruce–Pine–Fir No. 1/No. 2 or better. Dimensioned lumber represents nominal sizes.

W–5 Sheathing panels shall be marked with the American Plywood Association (APA) trademark and shall meet the latest U.S. Product Standard PS 1 or APA PRP–108 Performance Standards.

W–6 All wall sheathing panels shall be 1/2" thick 32/16, APA Rated (Block all edges) Fasten with 8d common nail spaced at 6"o.c. at panel perimeter supported egdes and 12"o.c. at interior intermediate supports(field). 13/8" min. fastener penetration. Lay wall sheathing with long dimension perpendicular to support members.

W–7 All roof sheathing panels shall be 5/8" thick, C–D Exterior grade, APA rated Exposure 1 meeting DOC PS1 or PS2. Fasten with 8d common nails spaced at 6"o.c. at panel perimeter supported egdes and 6"o.c. at interior intermediate supports (field). 13/8" min. fastener penetration. Lay roof sheathing with long dimension perpendicular to support members.

W–8 Wood to steel and wood to wood bolted connectors shall be made with ASTM A307 bolts with flat washers. Bolt holes in wood shall be 1/32" larger than the bolt. Wood nailers shall be fastened with 3/8"ø bolts staggered at 2'–0" o.c. unless otherwise noted.

W–9 Fastening Schedule:

Plate to Stud, Direct	2–16d
Stud to Plate, Toenail	4–8d

NOTE: SEE IBC 2009, TABLE 2304.9.1 "FASTENING SCHEDULE" FOR FASTENING/NAILING REQUIREMENTS NOT SHOWN.
W–10 Wood in Contact with concrete or masonry shall be pressure treated (P.T.). meeting AWPA U1 standard. All pressure treated lumber shall be Souther Yellow Pine No.1 or 2 treated with ACQ–D treatment for use category U3A or more server conditions.

W–11 The lateral bracing system includes plywood wall and roof sheathing. Contractor shall provide temporary bracing as required to laterally support the structure during construction.

W–12 LVL's shall be 1.9E Trusjoist Microllam as manufactured by Weyerhaeuser or approved equivalent. Minimum properties include:

Modulus of Elasticity, E	= 1.9e6	psi
Flexural Stess, Fb	= 2,600	psi
Horizontal Shear, Fv	= 285	psi

W–13 Provide lateral support at all bearing points and along compression edges at intervals of 24"o.c. or closer.

W–14 Minimun section width = 1 3/4". 3 1/2", 5 1/4", and 7" members may be combinations of 1 3/4" members. Follow manufacturers guidelines for Multiple Member Connections for side loaded beams.

W–15 Wood Construction Connectors shall be manufactured by Simpson Strong–Tie Co., Inc. and installed in accordance with the manufacturers recommendations.

W–16 All wood fasteners and hangers in contact with P.T. framing are to be stainless steel or hot dipped galvanized(min 2.0oz/ft^2) .

W–17 Design of wood stairs, hand rails and guard rails is the resposibility of others. Provide details of framing and certification of design sealed by a professional engineer licensed in the state in which the project is located.

STRUCTURAL TESTS, INSPECTIONS AND OBSERVATIONS:

T–1 Structural Tests, Inspections, and Reports for concrete construction, steel construction, masonry construction, soils, pier foundations, and other applicable construction shall be promptly submitted in writing to the Structural Engineer and Contractor.

T–2 Tests and Inspections shall be completed in accordance to IBC 2009, Section 1704 Special Inspections. Refer to Statement of Special Inspections/Quality Assurance Plan issued with final construction documents for the required program of special inspections for each building material/system.

T–3 Remove and replace work where test results indicate that it does not comply with specified requirements. Additional testing and inspecting, at Contractor's expense, will be performed to determine compliance of replaced or additional work with specified requirements.

T–5 Concrete Testing: Testing of composite samples of fresh concrete obtained according to ASTM C 172 shall be performed according to the following requirements:

D. Testing Frequency: Obtain one composite sample for each day's pour of each concrete mixture exceeding 5 cu. yd., but less than 25 cu. yd., plus one set for each additional 50 cu. yd. or fraction thereof. When frequency of testing will provide fewer than five compressive–strength tests for each concrete mixture, testing shall be conducted from at least five randomly selected batches or from each batch if fewer than five are used.
E. Slump: ASTM C 143/C 143M; one test at point of placement for each composite sample, but not less than one test for each day's pour of each concrete mixture. Perform additional tests when concrete consistency appears to change.
F. Air Content: ASTM C 231, pressure method, for normal–weight concrete; one test for each composite sample, but not less than one test for each day's pour of each concrete mixture.
G. Concrete Temperature: ASTM C 1064; one test hourly when air temperature is 40 deg F and below and when 80 deg F and above, and one test for each composite sample.
H. Compression Test Specimens: ASTM C 31.
1. Cast and laboratory cure two sets of two standard cylinder specimens for each composite sample.
2. Cast and field cure two sets of two standard cylinder specimens for each composite sample.
N. Compressive–Strength Tests: ASTM C 39; test one set of two laboratory–cured specimens at 7 days and one set of two specimens at 28 days. Test one set of two field–cured specimens at 7 days and one set of two specimens at 28 days.
O. Test results shall be reported in writing to Architect and Engineer, concrete manufacturer, and Contractor within 48 hours of testing. Reports of compressive–strength tests shall contain Project identification name and number, date of concrete placement, name of concrete testing and inspecting agency, location of concrete batch in Work, design compressive strength at 28 days, concrete mixture proportions and materials, compressive breaking strength, and type of break for both 7– and 28–day tests.
P. Additional Tests: Testing and inspecting agency shall make additional tests of concrete when test results indicate that slump, air entrainment, compressive strengths, or other requirements have not been met, as directed by Structural Engineer.
Q. Additional testing and inspecting, at Contractor's expense, will be performed to determine compliance of replaced or additional work with specified requirements.
R. Correct deficiencies in the Work that test reports and inspections indicate dos not comply with the Contract Documents.

T–6 Structural steel inspections
A. AWS certified inspector to Inspect both shop and field welds and verify compliance with the approved shop drawings and Contract Documents as follows:

- Complete and partial joint penetration groove welds: Inspect and perform ultrasonic tests of 100% of welds.
- Multi–pass fillet welds, single–pass fillet welds larger than 5/16", and plug and slot welds: Visually inspect 100% of welds and perform magnetic particle tests as required by inspector if defects are observed from visual inspection.
- Single–pass fillet welds smaller than 5/16": Visually inspect 50% of welds and perform magnetic particle tests as required by inspector if defects are observed from visual inspection.

B. AWS certified inspector to verify metal deck type, gage thickness, and finish for compliance with the approved shop drawings and Contract Documents.Inspect welding and side–lap fastening for size, location, and quantity and verify compliance with the approved shop drawings and Contract Documents.

c. AWS certified inspector to inspect the erected steel framing for member sizes, member locations, and connection details such as bracing, stiffening, and proper application of joint details and verify compliance with the approved shop drawings and Contract Documents.

T–7 Structural Observations:
A. Notify engineer of progress of constriction for coordination of site observations per section 1702 of the International Building Code. These observations are intended for review of general design intent and do not relieve the general contractor of their responsibility to perform quality control.

ABBREVIATIONS
± = PLUS OR MINUS
@ = AT
AB = ANCHOR BOLT
AFF = ABOVE FINISH FLOOR
ALUM = ALUMINUM
ALT = ALTERNATE
ARCH = ARCHITECTURAL
BM. = BEAM
B.O.F. = BOTTOM OF FOOTING
BOTT. = BOTTOM
BLDG. = BUILDING
CJ = CONTROL JOINT
CL = CENTERLINE
CLR = CLEAR
CMU = CONCRETE MASONRY UNIT
COL. = COLUMN
CONC. = CONCRETE
CONST. = CONSTRUCTION
CONT. = CONTINUOUS
COOR = COORDINATE
ø, DIA. = DIAMETER
DIM = DIMENSION
DIST. = DISTANCE
°=DEGREES
DW = DOWN
DWGS. = DRAWINGS
E., (E), EXIST = EXISTING
E.F. = EACH FACE
E.W. = EACH WAY
EA. = EACH
EQ = EQUAL
ELEV. = ELEVATION
EMBED. = EMBEDMENT
EXP. = EXPANSION
EXT = EXTERIOR
FFE = FINISHED FLOOR ELEVATION
FIN. = FINISHED
FLR. = FLOOR
FNDN. = FOUNDATION
FT = FEET
FTG = FOOTING
GA. = GUAGE
GC = GENERAL CONTRACTOR
GALV. = GALVANIZED
HORIZ. = HORIZONTAL
HSS = HOLLOW STRUCTURAL SECTION
IN = INCH
INT = INTERIOR
K = KIP
LB = POUND
LLH = LONG LEG HORIZONTAL
LLV = LONG LEG VERTICAL
MAX. = MAXIMUM
MIN. = MINIMUM
M.O. = MASONRY OPENING
MPH = MILES PER HOUR
MTL. = METAL
#, No. = NUMBER
N.T.S. = NOT TO SCALE
O.C. = ON CENTER
OPNG. = OPENING

P.PL = PLATE
PLF = POUNDS PER LINEAR FOOT
PSF = POUNDS PER SQUARE FOOT
PSI = POUNDS PER SQUARE INCH
P.T. = PRESSURE TREATED

RAD = RADIUS
REC. = RECOMMENDATION
REINF. =REINFORCE (D\ING)
REQ'D = REQUIRED
REV = REVISION
RO = ROUGH OPENING

SCHD = SCHEDULE
SIM = SIMILAR
S.F. = SQUARE FEET
SPEC = SPECIFICATION
STD. = STANDARD
STIFF. = STIFFENERS
STL. = STEEL
TH., TH. = THICK
T.O.S. = TOP OF STEEL
T.O.W. = TOP OF WALL
T.O.B.S. = TOP OF BRICK SHELF
TYP. = TYPICAL
U.N.O. = UNLESS NOTED OTHERWISE
VB = VAPOR BARRIER
VERT. = VERTICAL
V.I.F. = VERIFY IN FIELD
W/ = WITH
WO = WITHOUT
WS = WATERSTOP
WWF\WWM = WELDED WIRE FABRIC\MESH

PERMIT SET
JUNE 25, 2014 NOT FOR CONSTRUCTION

48 Constitution Drive
Bedford, NH 03110
Phone (603) 472-4488
Fax (603) 472-9747
www.tfmoran.com

TFM Structural Engineers

COMMONWEALTH OF MASSACHUSETTS
THOMAS E. LAMB
STRUCTURAL
NO. 49045
REGISTERED PROFESSIONAL ENGINEER
6/25/14

REV	DATE	DESCRIPTION	DR	CK

1108–1110 Broadway
SOMERVILLE, MA

PREPARED FOR
JSS REALTY
CLIENT ADDRESS
NORTH READING, MA

JUNE 25, 2014

SCALE: AS SHOWN

CADFILE 1108–1110 BR
DR TEL CK PES
JOB NO. 31472.00

STRUCTURAL GENERAL NOTES

S0.0

P:\TFM Projects\31472.00 JSS Realty 1110 Broadway–Somerville, MA\Working Dwgs\1108–1110_Broadway_Structural_Drawings.dwg

SHEARWALL SCHEDULE

MARK	SHEATHING	NAILING EDGE	NAILING FIELD	FLR–FLR HOLDOWN	PLATE TO FLOOR	FNDN HOLDOWN	FNDN ANCHOR BOLTS
1	15/32" APA RATED SHEATHING(BOTH SIDES OF WALL)	10d AT 3" o.c.	10d AT 12" o.c.	SIMPSON HDU14–SDS2.5 W/ 5/8"ø THREADED ROD	(2) ROWS OF (4)–16d NAILS AT 24" O.C.	SIMPSON HDU14–SDS2.5 (SEE NOTE #7)	5/8"ø ANCHOR BOLTS @ 32"o.c.
2	15/32" APA RATED SHEATHING	10d AT 3" o.c.	10d AT 12" o.c.	SIMPSON HDU8–SDS2.5 W/ 5/8"ø THREADED ROD	(2) ROWS OF (4)–16d NAILS AT 24" O.C.	SIMPSON HDU8–SDS2.5 W/ 5/8"ø THREADED ROD	5/8"ø ANCHOR BOLTS @ 32"o.c.
3	15/32" APA RATED SHEATHING	8d AT 6" o.c.	10d AT 12" o.c.	SIMPSON HDU4–SDS2.5 W/ 5/8"ø THREADED ROD	(2) ROWS OF (4)–16d NAILS AT 24" O.C.	SIMPSON HDU4–SDS2.5 (SEE NOTE #7)	5/8"ø ANCHOR BOLTS @ 48"o.c.

NOTES:
1. SHEATHING SHALL BE INSTALLED ON (1) SIDE OF WALL, UNLESS OTHERWISE NOTED, ON SIDE OF MARK SHOWN ON PLAN.
2. NAILS SHALL BE COMMON NAILS. USE HOT DIPPED GALVANIZED NAILS FOR NAILING OF SHEATHING INTO PT SILL PL'S AND SHEATHING.
3. PROVIDE 2x BLOCKING BETWEEN STUDS FOR HORIZONTAL PANEL EDGE NAILING.
4. PROVIDE END POST EACH END OF WALL AND CONNECT HOLDOWNS TO END POSTS.
5. SEE DETAIL 3/S1.3 FOR STRAP HOLDOWN CONSTRUCTION DETAILS.
6. PROVIDE HOLDOWNS AT ENDS OF SHEAR WALLS AS NOTED ON PLAN. SEE DETAILS 1/S2.1 AND 4/S1.3 FOR STRAP AND ROD TYPE HOLDOWN CONNECTIONS.
7. CONNECT HOLDOWNS TO FOUNDATIONS AS FOLLOWS:
   HDU4 – 5/8"ø ROD INSTALLED WITH SIMPSON 'AT' ADHESIVE WITH 10" EMBEDMENT OR SIMPSON SSTB16
   HDU8 – 7/8"ø ROD INSTALLED WITH SIMPSON 'AT' ADHESIVE WITH 10" EMBEDMENT OR SIMPSON SSTB28

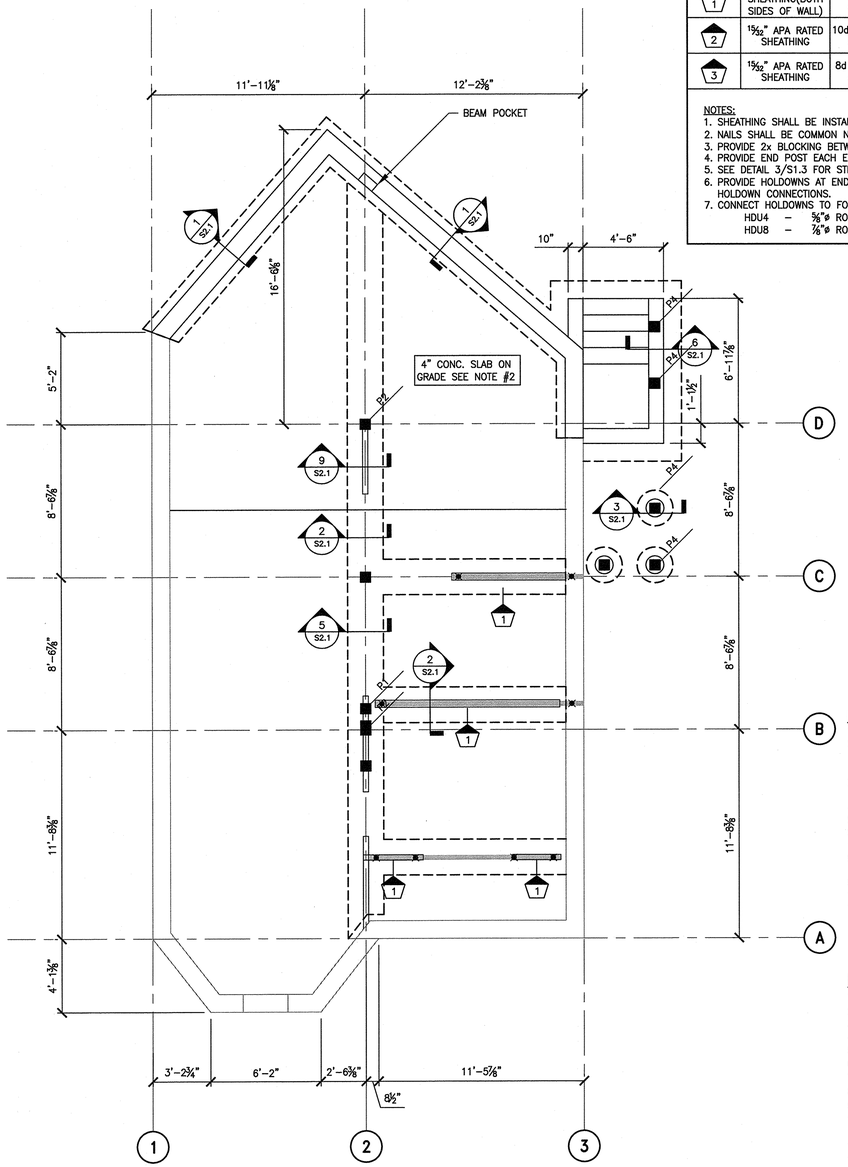

FOUNDATION PLAN

SCALE: 1/4"=1'-0"

FOUNDATION PLAN NOTES:

1. FINISHED FLOOR REFERENCE ELEVATION = 8'–7½" V.I.F. U.N.O.
2. FLOOR CONSTRUCTION: 4" FIN. CONCRETE FLOOR SLAB (f'c=3,500 PSI) REINFORCED W/W6X6–W1.4X1.4 WWF., OVER 8" OF ¾" FREE DRAINING MATERIAL COMPACTED TO 95% MODIFIED PROCTOR DESNISTY. (VERIFY WITH GEOTECH REPORT.)
3. BOTTOM OF FOOTING ELEVATION TO BE 4'–0" MIN. BELOW FINISHED GRADE. UNLESS SHOWN THUS [ ] FROM REFERENCE ELEVATION.
4. FOOTINGS TO BE CENTERED ON COLUMN CENTERLINES UNLESS NOTED OTHERWISE.
5. SEE ARCH. DWGS. FOR FOUNDATION DROPS, WATERPROOFING, VAPOR BARRIERS AND INSULATION.
6. CONTROL JOINTS SHALL BE PLACED AS SHOWN ON DRAWING, 12'–0" O.C. (MAX)
7. PROVIDE ½"ø ANCHOR BOLTS @ 48" O.C. AT ALL WALLS U.N.O. ON SHEAR WALL SCHEDULE.
8. DENOTES SHEAR WALL HOLD DOWN FROM ABOVE, SEE SHEAR WALL SCHEDULE.
9. S – – S DENOTES STEP IN FOOTING. SEE TYPICAL STEPPED FOOTING DETAIL 4/S2.0.
10. EMBED WALL ANCHORS 6" MINIMUM UNLESS NOTED OTHERWISE.
11. PROVIDE POCKETS IN CONCRETE WALLS FOR DROPPED BEAMS AS REQUIRED.

FLOOR FRAMING PLAN NOTES:

1. FINISHED FLOOR ELEVATION +0'–0" U.N.O.
2. FLOOR CONSTRUCTION: ¾" T&G ADVANTECH SHEATHING.
3. DENOTES DECK SPAN DIRECTION.
4. COORDINATE FLOOR JOIST LOCATIONS W/MECHANICAL & ELECTRICAL TRADES.
5. ALL WALL STUDS AT EXTERIOR WALLS TO ALIGN FROM FLOOR TO FLOOR.
6. STAGGER (2) 2x TOP PLATE 4'–0" MINIMUM TYPICAL.
7. ALL 2x FRAMING TO BE SPF NO. 1/NO. 2 (U.N.O.)
8. PROVIDE MINIMUM OF (2) STUDS UNDER BEAMS UNLESS NOTED OTHERWISE.
9. EXTERIOR NEW WALL CONSTRUCTION 2x6 SPF#2 STUDS AT 24" O.C.
10. INTERIOR LOAD BEARING AND SHEAR WALL CONSTRUCTION 2x4 SPF#2 STUDS AT 16" O.C. U.N.O.
11. 'DJ' DENOTES DOUBLE JOIST.
12. DENOTES SHEARWALL EXTENTS. SEE SHEAR WALL SCHEDULE FOR CONSTRUCTION DETAILS.
13. DENOTES SHEARWALL HOLDOWN, SEE SHEAR WALL SCHEDULE.
14. DENOTES SHEARWALL STRAP HOLDOWN, SEE SHEAR WALL SCHEDULE FOR TYPE.
15. DENOTES SHEARWALL DESIGNATION. SEE SHEAR WALL SCHEDULE FOR CONSTRUCTION DETAILS.
16. DENOTES STEP IN FINISHED FLOOR ELEVATION. STEP SHOWN REFERENCES ELEVATION IN PLAN NOTES.
17. DENOTES (3)–2x STUD POST U.N.O.
18. ALL POSTS TO BE CONTINUOUS TO FOUNDATIONS U.N.O. PROVIDE SOLID BLOCKING AND OR SQUASH BLOCKS AT RIM JOISTS AND INTERMEDIATE BEARING POINTS OVER DROPPED BEAMS.
19. SISTER ALL EXISTING DAMAGED MEMBERS WITH (1) NEW 2x8 EACH SIDE OF MEMBER SEE TYP DETAIL
20. ALL BEAMS ARE FLUSH FRAMED UNLESS NOTED OTHERWISE
21. PROVIDE SIMPSON HANGER AT ALL JOISTS SUPPORTED ON FLUSH FRAMED BEAMS AS FOLLOW
    2x8–LU28
    2x8R–LU28R–18
21. ALL EXTERIOR WINDOW HEADERS H1 U.N.O
22. PROVIDE (3) 2x8 BEAMS AT STAIR STRINGER BEARING POINTS ON FRAMED FLOORS U.N.O.

WOOD POST SCHEDULE

MARK	SIZE	BASE PLATE	CAP PLATE
P1	5¼x5¼ PSL	FRAME WITHIN WALL	FRAME WITHIN WALL
P2	7x7 PSL	FRAME WITHIN WALL	FRAME WITHIN WALL
P3	P.T. 4x4	SIMPSON AB44	SIMPSON LPC4Z
P4	P.T. 6x6	SIMPSON AB66	SIMPSON LPC6Z

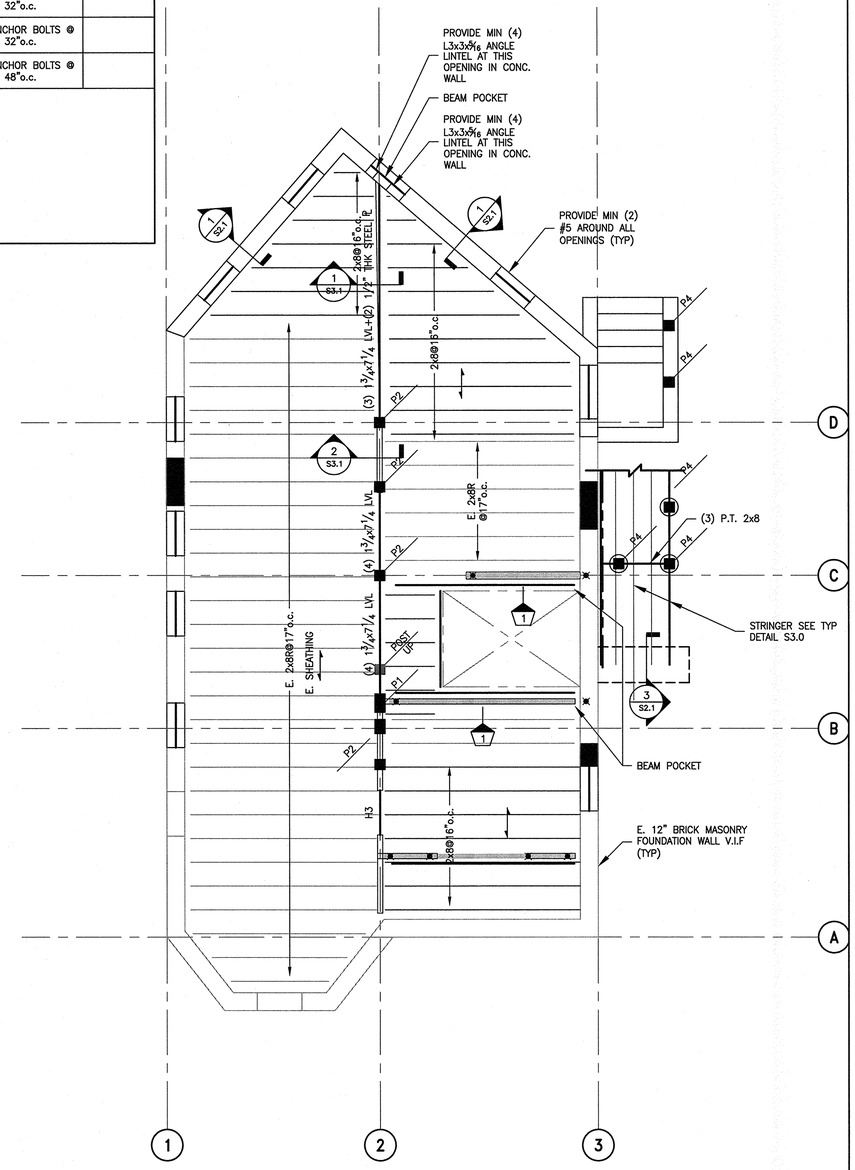

FIRST FLOOR FRAMING PLAN

SCALE: 1/4"=1'-0"

WOOD HEADER SCHEDULE

MARK	SIZE (WIDTH x DEPTH)	# JACK STUDS	# KING STUDS
H1	(2)–2x6	1	1
H2	(2)–2x10	1	1
H3	(2)–2x12	2	2
H4	(2) 1¾x9¼ LVL	2	2

NOTES:
1. HEADERS SHALL BE DROPPED UNLESS OTHERWISE NOTED AS FLUSH FRAMED.
2. HEADERS SHALL BE FLUSH WITH EXTERIOR FACE OF WALL STUD, SHIM INSIDE FACE WITH 2x OR PLYWOOD AS REQUIRED.
3. JAMB POSTS SHALL BE CONTINUOUS DOWN TO FOUNDATIONS BELOW UNLESS OTHERWISE NOTED.
4. BOX HEADER WIDTH TO BE 3½" AT 2x4 WALLS AND 5½" AT 2x6 WALLS.

PERMIT SET

JUNE 25, 2014 NOT FOR CONSTRUCTION

Copyright 2013 © Thomas F. Moran, Inc.
48 Constitution Drive, Bedford, N.H. 03110

All rights reserved. These plans and materials may not be copied, duplicated, replicated or otherwise reproduced in any form whatsoever without the prior written permission of Thomas F. Moran, Inc.

This plan is not effective unless signed by a duly authorized officer of Thomas F. Moran, Inc.

48 Constitution Drive
Bedford, NH 03110
Phone (603) 472-4488
Fax (603) 472-9747
www.tfmoran.com

TFM Structural Engineers

COMMONWEALTH OF MASSACHUSETTS
THOMAS E. LAMB
STRUCTURAL
NO. 49045
REGISTERED PROFESSIONAL ENGINEER

REV.	DATE	DESCRIPTION	DR	CK

1108–1110 Broadway
SOMERVILLE, MA

PREPARED FOR
JSS REALTY
CLIENT ADDRESS
NORTH READING, MA

SCALE: AS SHOWN

JUNE 25, 2014

CADFILE 1108–1110 BR
DR TEL CK PES
FILE 31472.00

FOUNDATION AND FIRST FLOOR FRAMING PLAN

S1.0

P:\TFM Projects\31472.00 JSS Realty 1110 Broadway–Somerville, MA\Working Dwgs\1108–1110_Broadway_Structural_Drawings.dwg

SHEARWALL SCHEDULE

MARK	SHEATHING	NAILING EDGE	NAILING FIELD	FLR–FLR HOLDOWN	PLATE TO FLOOR	FNDN HOLDOWN	FNDN ANCHOR BOLTS
1	15/32" APA RATED SHEATHING(BOTH SIDES OF WALL)	10d AT 3" o.c.	10d AT 12" o.c.	SIMPSON HDU14–SDS2.5 W/ ⅝"ø THREADED ROD	(2) ROWS OF (4)–16d NAILS AT 24" O.C.	SIMPSON HDU14–SDS2.5 (SEE NOTE #7)	⅝"ø ANCHOR BOLTS @ 32"o.c.
2	15/32" APA RATED SHEATHING	10d AT 3" o.c.	10d AT 12" o.c.	SIMPSON HDU8–SDS2.5 W/ ⅝"ø THREADED ROD	(2) ROWS OF (4)–16d NAILS AT 24" O.C.	SIMPSON HDU8–SDS2.5 W/ ⅝"ø THREADED ROD	⅝"ø ANCHOR BOLTS @ 32"o.c.
3	15/32" APA RATED SHEATHING	8d AT 6" o.c.	10d AT 12" o.c.	SIMPSON HDU4–SDS2.5 W/ ⅝"ø THREADED ROD	(2) ROWS OF (4)–16d NAILS AT 24" O.C.	SIMPSON HDU4–SDS2.5 (SEE NOTE #7)	⅝"ø ANCHOR BOLTS @ 48"o.c.

NOTES:
1. SHEATHING SHALL BE INSTALLED ON (1) SIDE OF WALL, UNLESS OTHERWISE NOTED, ON SIDE OF MARK SHOWN ON PLAN.
2. NAILS SHALL BE COMMON NAILS. USE HOT DIPPED GALVANIZED NAILS FOR NAILING OF SHEATHING INTO PT SILL ℞'S AND SHEATHING.
3. PROVIDE 2x BLOCKING BETWEEN STUDS FOR HORIZONTAL PANEL EDGE NAILING.
4. PROVIDE END POST EACH END OF WALL AND CONNECT HOLDOWNS TO END POSTS.
5. SEE DETAIL 3/S1.3 FOR STRAP HOLDOWN CONSTRUCTION DETAILS.
6. PROVIDE HOLDOWNS AT ENDS OF SHEAR WALLS AS NOTED ON PLAN. SEE DETAILS 1/S2.1 AND 4/S1.3 FOR STRAP AND ROD TYPE HOLDOWN CONNECTIONS.
7. CONNECT HOLDOWNS TO FOUNDATIONS AS FOLLOWS:
   HDU4 – ⅝"ø ROD INSTALLED WITH SIMPSON 'AT' ADHESIVE WITH 10" EMBEDMENT OR SIMPSON SSTB16
   HDU8 – ⅞"ø ROD INSTALLED WITH SIMPSON 'AT' ADHESIVE WITH 10" EMBEDMENT OR SIMPSON SSTB28

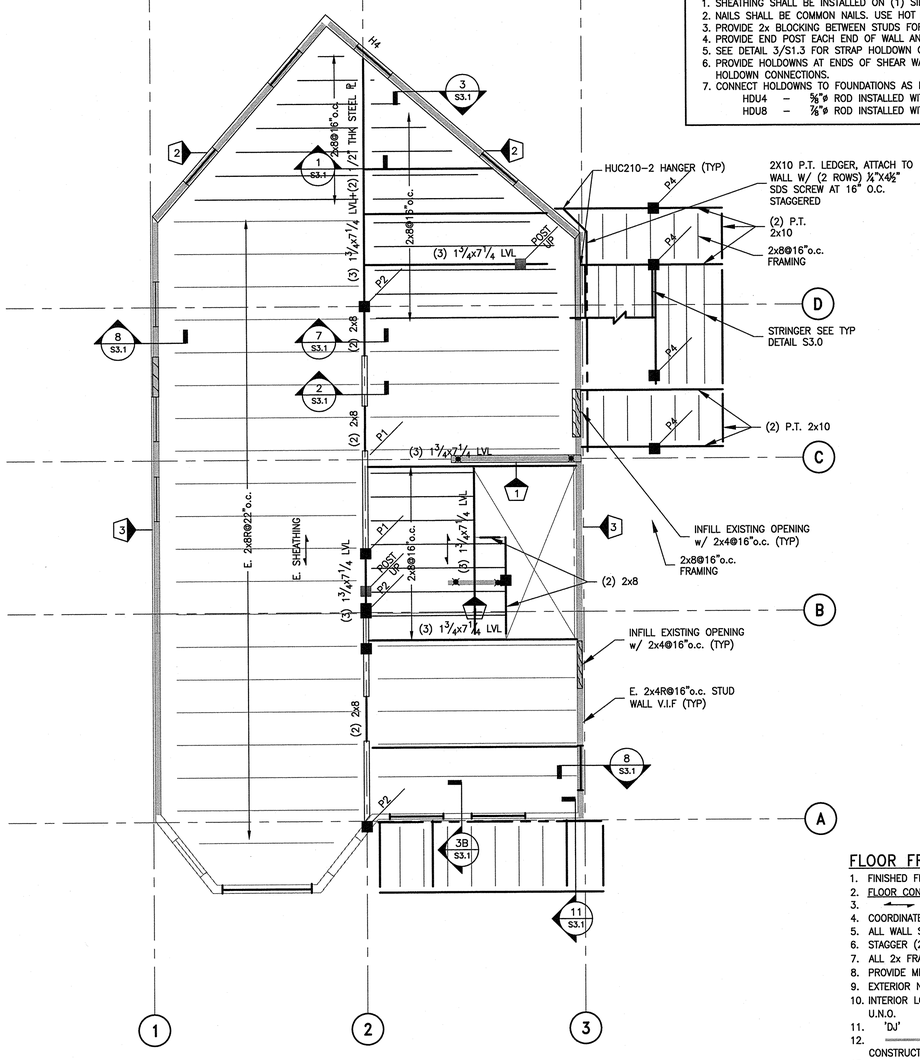

SECOND FLOOR FRAMING PLAN

SCALE: 1/4"=1'-0"

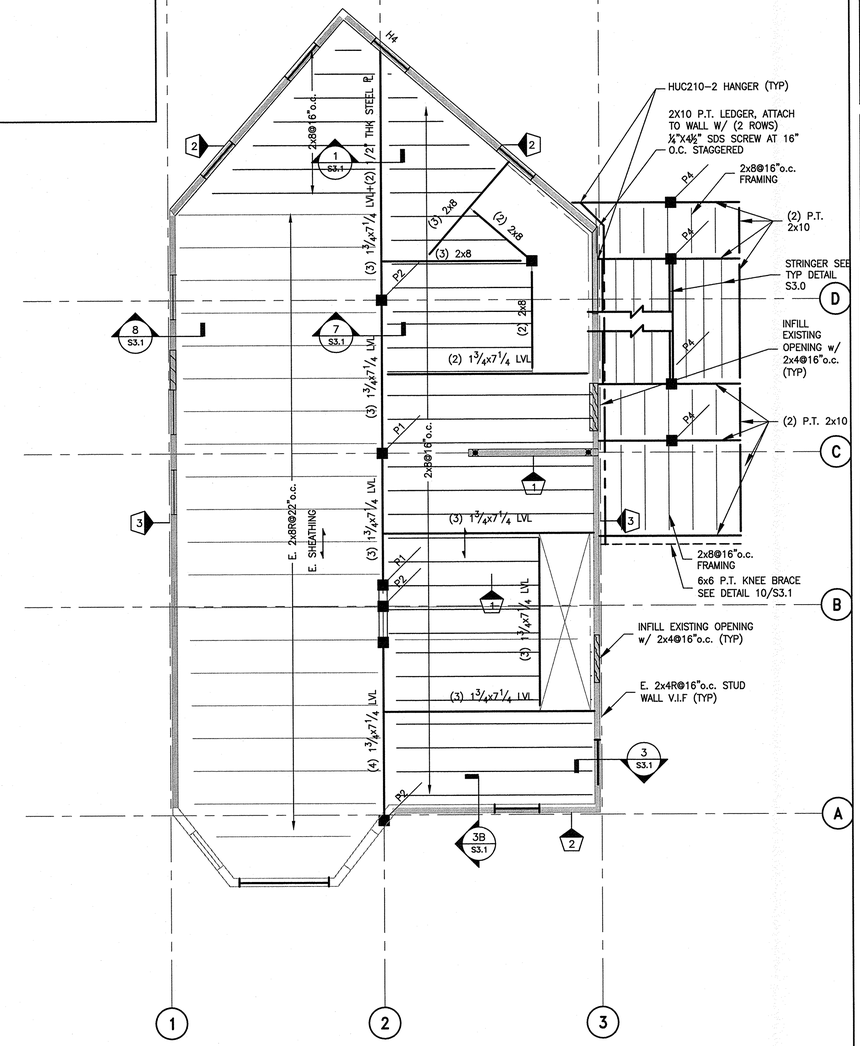

THIRD FLOOR FRAMING PLAN

SCALE: 1/4"=1'-0"

FLOOR FRAMING PLAN NOTES:

1. FINISHED FLOOR ELEVATION=9'-8"@2ND 19'-2½"@3RD V.I.F. U.N.O.
2. FLOOR CONSTRUCTION: ¾" T&G ADVANTECH SHEATHING.
3. DENOTES DECK SPAN DIRECTION.
4. COORDINATE FLOOR JOIST LOCATIONS W/MECHANICAL & ELECTRICAL TRADES.
5. ALL WALL STUDS AT EXTERIOR WALLS TO ALIGN FROM FLOOR TO FLOOR.
6. STAGGER (2) 2x TOP PLATE 4'-0" MINIMUM TYPICAL.
7. ALL 2x FRAMING TO BE SPF NO. 1/NO. 2 (U.N.O.)
8. PROVIDE MINIMUM OF (2) STUDS UNDER BEAMS UNLESS NOTED OTHERWISE.
9. EXTERIOR NEW WALL CONSTRUCTION 2x6 SPF#2 STUDS AT 24" O.C.
10. INTERIOR LOAD BEARING AND SHEAR WALL CONSTRUCTION 2x4 SPF#2 STUDS AT 16" O.C. U.N.O.
11. 'DJ' DENOTES DOUBLE JOIST.
12. DENOTES SHEARWALL EXTENTS. SEE SHEAR WALL SCHEDULE FOR CONSTRUCTION DETAILS.
13. DENOTES SHEARWALL HOLDOWN, SEE SHEAR WALL SCHEDULE.
14. DENOTES SHEARWALL STRAP HOLDOWN, SEE SHEAR WALL SCHEDULE FOR TYPE.
15. X DENOTES SHEARWALL DESIGNATION. SEE SHEAR WALL SCHEDULE FOR CONSTRUCTION DETAILS.
16. DENOTES STEP IN FINISHED FLOOR ELEVATION. STEP SHOWN REFERENCES ELEVATION IN PLAN NOTES.
17. ■ DENOTES (3)–2x STUD POST U.N.O.
18. ALL POSTS TO BE CONTINUOUS TO FOUNDATIONS U.N.O. PROVIDE SOLID BLOCKING AND OR SQUASH BLOCKS AT RIM JOISTS AND INTERMEDIATE BEARING POINTS OVER DROPPED BEAMS.
19. SISTER ALL EXISTING DAMAGED MEMBERS WITH (1) NEW 2x8 EACH SIDE OF MEMBER SEE TYP DETAIL
20. ALL BEAMS ARE FLUSH FRAMED UNLESS NOTED OTHERWISE
21. PROVIDE SIMPSON HANGER AT ALL JOISTS SUPPORTED ON FLUSH FRAMED BEAMS AS FOLLOW
    2x8–LU28
    2x8R–LU28R–18
21. ALL EXTERIOR WINDOW HEADERS H1 U.N.O
22. PROVIDE (3) 2x8 BEAMS AT STAIR STRINGER BEARING POINTS ON FRAMED FLOORS U.N.O.

WOOD POST SCHEDULE

MARK	SIZE	BASE PLATE	CAP PLATE
P1	5¼x5¼ PSL	FRAME WITHIN WALL	FRAME WITHIN WALL
P2	7x7 PSL	FRAME WITHIN WALL	FRAME WITHIN WALL
P3	P.T. 4x4	SIMPSON AB44	SIMPSON LPC4Z
P4	P.T. 6x6	SIMPSON AB66	SIMPSON LPC6Z

WOOD HEADER SCHEDULE

MARK	SIZE (WIDTH x DEPTH)	# JACK STUDS	# KING STUDS
H1	(2)–2x8	1	1
H2	(2)–2x10	1	1
H3	(2)–2x12	2	2
H4	(2) 1¾x9¾ LVL	2	2

NOTES:
1. HEADERS SHALL BE DROPPED UNLESS OTHERWISE NOTED AS FLUSH FRAMED.
2. HEADERS SHALL BE FLUSH WITH EXTERIOR FACE OF WALL STUD, SHIM INSIDE FACE WITH 2x OR PLYWOOD AS REQUIRED.
3. JAMB POSTS SHALL BE CONTINUOUS DOWN TO FOUNDATIONS BELOW UNLESS OTHERWISE NOTED.
4. BOX HEADER WIDTH TO BE 3½" AT 2x4 WALLS AND 5½" AT 2x6 WALLS.

PERMIT SET
JUNE 25, 2014
NOT FOR CONSTRUCTION

Copyright 2013 © Thomas F. Moran, Inc.
48 Constitution Drive, Bedford, N.H. 03110

All rights reserved. These plans and materials may not be copied, duplicated, replicated or otherwise reproduced in any form whatsoever without the prior written permission of Thomas F. Moran, Inc.

This plan is not effective unless signed by a duly authorized officer of Thomas F. Moran, Inc.

48 Constitution Drive
Bedford, NH 03110
Phone (603) 472-4488
Fax (603) 472-9747
www.tfmoran.com
TFM Structural Engineers

COMMONWEALTH OF MASSACHUSETTS
THOMAS E. LAMB
STRUCTURAL
NO. 49045
REGISTERED PROFESSIONAL ENGINEER
6/26/14

REV.	DATE	DESCRIPTION	DR	CK
8				
7				
6				
5				
4				
3				
2				
1				

1108–1110 Broadway
SOMERVILLE, MA

PREPARED FOR
JSS REALTY
CLIENT ADDRESS
NORTH READING, MA

JUNE 25, 2014

SCALE: AS SHOWN

CADFILE 1108–1110 BR
DR TEL CK PES
FILE 31472.00

SECOND AND THIRD FLOOR FRAMING PLAN

S1.1

P:\TFM Projects\31472.00 JSS Realty 1110 Broadway-Somerville, MA\Working Dwgs\1108-1110_Broadway_Structural_Drawings.dwg

SHEARWALL SCHEDULE

MARK	SHEATHING	NAILING EDGE	NAILING FIELD	FLR–FLR HOLDOWN	PLATE TO FLOOR	FNDN HOLDOWN	FNDN ANCHOR BOLTS	END POST
1	15/32" APA RATED SHEATHING(BOTH SIDES OF WALL)	10d AT 3" o.c.	10d AT 12" o.c.	SIMPSON HDU14–SDS2.5 W/ 5/8"ø THREADED ROD	(2) ROWS OF (4)–16d NAILS AT 24" O.C.	SIMPSON HDU14–SDS2.5 (SEE NOTE #7)	5/8"ø ANCHOR BOLTS @ 32"o.c.	(4)–2x STUD POST
2	15/32" APA RATED SHEATHING	10d AT 3" o.c.	10d AT 12" o.c.	SIMPSON HDU8–SDS2.5 W/ 5/8"ø THREADED ROD	(2) ROWS OF (4)–16d NAILS AT 24" O.C.	SIMPSON HDU8–SDS2.5 W/ 5/8"ø THREADED ROD	5/8"ø ANCHOR BOLTS @ 32"o.c.	(4)–2x STUD POST
3	15/32" APA RATED SHEATHING	8d AT 6" o.c.	10d AT 12" o.c.	SIMPSON HDU4–SDS2.5 W/ 5/8"ø THREADED ROD	(2) ROWS OF (4)–16d NAILS AT 24" O.C.	SIMPSON HDU4–SDS2.5 (SEE NOTE #7)	5/8"ø ANCHOR BOLTS @ 48"o.c.	(4)–2x STUD POST

NOTES:
1. SHEATHING SHALL BE INSTALLED ON (1) SIDE OF WALL, UNLESS OTHERWISE NOTED, ON SIDE OF MARK SHOWN ON PLAN.
2. NAILS SHALL BE COMMON NAILS. USE HOT DIPPED GALVANIZED NAILS FOR NAILING OF SHEATHING INTO PT SILL PL'S AND SHEATHING.
3. PROVIDE 2x BLOCKING BETWEEN STUDS FOR HORIZONTAL PANEL EDGE NAILING.
4. PROVIDE END POST EACH END OF WALL AND CONNECT HOLDOWNS TO END POSTS.
5. SEE DETAIL 3/S1.3 FOR STRAP HOLDOWN CONSTRUCTION DETAILS.
6. PROVIDE HOLDOWNS AT ENDS OF SHEAR WALLS AS NOTED ON PLAN. SEE DETAILS 1/S2.1 AND 4/S1.3 FOR STRAP AND ROD TYPE HOLDOWN CONNECTIONS.
7. CONNECT HOLDOWNS TO FOUNDATIONS AS FOLLOWS:
   HDU4 – 5/8"ø ROD INSTALLED WITH SIMPSON 'AT' ADHESIVE WITH 10" EMBEDMENT OR SIMPSON SSTB16
   HDU8 – 7/8"ø ROD INSTALLED WITH SIMPSON 'AT' ADHESIVE WITH 10" EMBEDMENT OR SIMPSON SSTB28

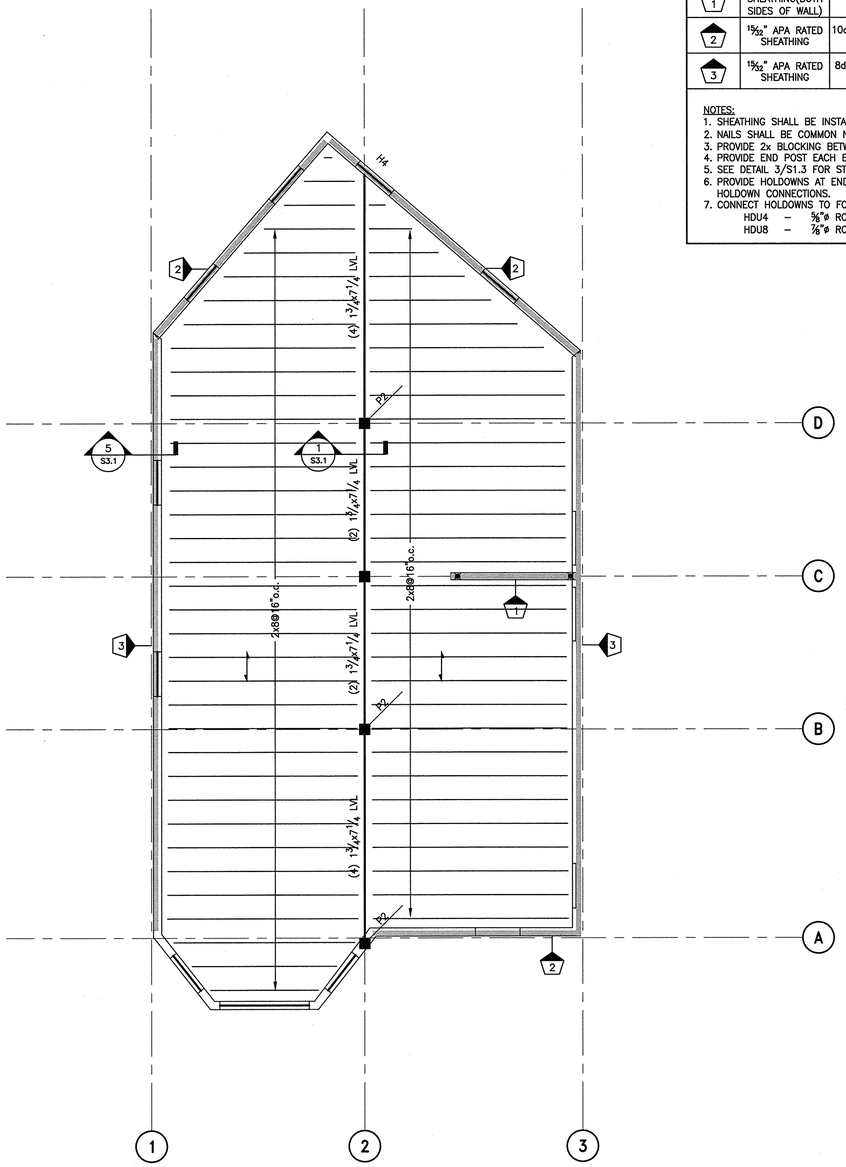

ROOF FRAMING PLAN

SCALE: 1/4"=1'-0"

ROOF FRAMING PLAN NOTES:

1. TOP OF ROOF REFERENCE ELEVATION = +39'–2½"V.I.F.
2. ROOF CONSTRUCTION: 5/8" OSB OR PLYWOOD SHEATHING, C–D EXT. GRADE, APA RATED EXPOSURE
3. TIMBER FRAMING TO BE NO. 1/NO. 2 SPRUCE PINE FIR (Fb=875 PSI) OR BETTER.
4. EXTERIOR NEW WALL CONSTRUCTION: 2x6 STUDS AT 16" O.C. U.N.O
5. PROVIDE H2.5A HURRICANE CLIPS BY SIMPSON OR APPROVED EQUAL AT ALL RAFTER BEARING POINTS.
6. STAGGER (2) 2x TOP PLATE 4'–0" MINIMUM TYPICAL.
7. ——— DENOTES SHEARWALL EXTENTS, SEE SHEAR WALL SCHEDULE FOR CONSTRUCTION DETAILS.
8. ✖ DENOTES SHEARWALL ROD HOLDOWN, SEE SHEAR WALL SCHEDULE FOR TYPE.
9. (X) DENOTES SHEAR WALL DESIGNATION. SEE SHEAR WALL SCHEDULE FOR CONSTRUCTION DETAILS.

FLOOR FRAMING PLAN NOTES:

1. FINISHED FLOOR ELEVATION +29'–2½ " U.N.O. V.I.F
2. FLOOR CONSTRUCTION: ¾" T&G ADVANTECH SHEATHING.
3. ←→ DENOTES DECK SPAN DIRECTION.
4. COORDINATE FLOOR JOIST LOCATIONS W/MECHANICAL & ELECTRICAL TRADES.
5. ALL WALL STUDS AT EXTERIOR WALLS TO ALIGN FROM FLOOR TO FLOOR.
6. STAGGER (2) 2x TOP PLATE 4'–0" MINIMUM TYPICAL.
7. ALL 2x FRAMING TO BE SPF NO. 1/NO. 2 (U.N.O.)
8. PROVIDE MINIMUM OF (2) STUDS UNDER BEAMS UNLESS NOTED OTHERWISE.
9. EXTERIOR NEW WALL CONSTRUCTION 2x6 SPF#2 STUDS AT 16" O.C.
10. INTERIOR LOAD BEARING AND SHEAR WALL CONSTRUCTION 2x4 SPF#2 STUDS AT 16" O.C. U.N.O.
11. 'DJ' DENOTES DOUBLE JOIST.
12. ——— DENOTES SHEARWALL EXTENTS. SEE SHEAR WALL SCHEDULE FOR CONSTRUCTION DETAILS.
13. ✖ DENOTES SHEARWALL HOLDOWN, SEE SHEAR WALL SCHEDULE.
14. DENOTES SHEARWALL STRAP HOLDOWN, SEE SHEAR WALL SCHEDULE FOR TYPE.
15. (X) DENOTES SHEARWALL DESIGNATION. SEE SHEAR WALL SCHEDULE FOR CONSTRUCTION DETAILS.
16. DENOTES STEP IN FINISHED FLOOR ELEVATION. STEP SHOWN REFERENCES ELEVATION IN PLAN NOTES.
17. ■ DENOTES (3)–2x STUD POST U.N.O.
18. ALL POSTS TO BE CONTINUOUS TO FOUNDATIONS U.N.O. PROVIDE SOLID BLOCKING AND OR SQUASH BLOCKS AT RIM JOISTS AND INTERMEDIATE BEARING POINTS OVER DROPPED BEAMS.
19. SISTER ALL EXISTING DAMAGED MEMBERS WITH (1) NEW 2x8 EACH SIDE OF MEMBER SEE TYP DETAIL
20. ALL BEAMS ARE FLUSH FRAMED UNLESS NOTED OTHERWISE
PROVIDE SIMPSON HANGER AT ALL JOISTS SUPPORTED ON FLUSH FRAMED BEAMS AS FOLLOW
2x8–LU28
2x8R–LU28R–18
21. ALL EXTERIOR WINDOW HEADERS H1 U.N.O
22. PROVIDE (3) 2x8 BEAMS AT STAIR STRINGER BEARING POINTS ON FRAMED FLOORS U.N.O.

WOOD POST SCHEDULE

MARK	SIZE	BASE PLATE	CAP PLATE
P1	5¼x5¼ PSL	FRAME WITHIN WALL	FRAME WITHIN WALL
P2	7x7 PSL	FRAME WITHIN WALL	FRAME WITHIN WALL
P3	P.T. 4x4	SIMPSON AB44	SIMPSON LPC4Z
P4	P.T. 6x6	SIMPSON AB66	SIMPSON LPC6Z

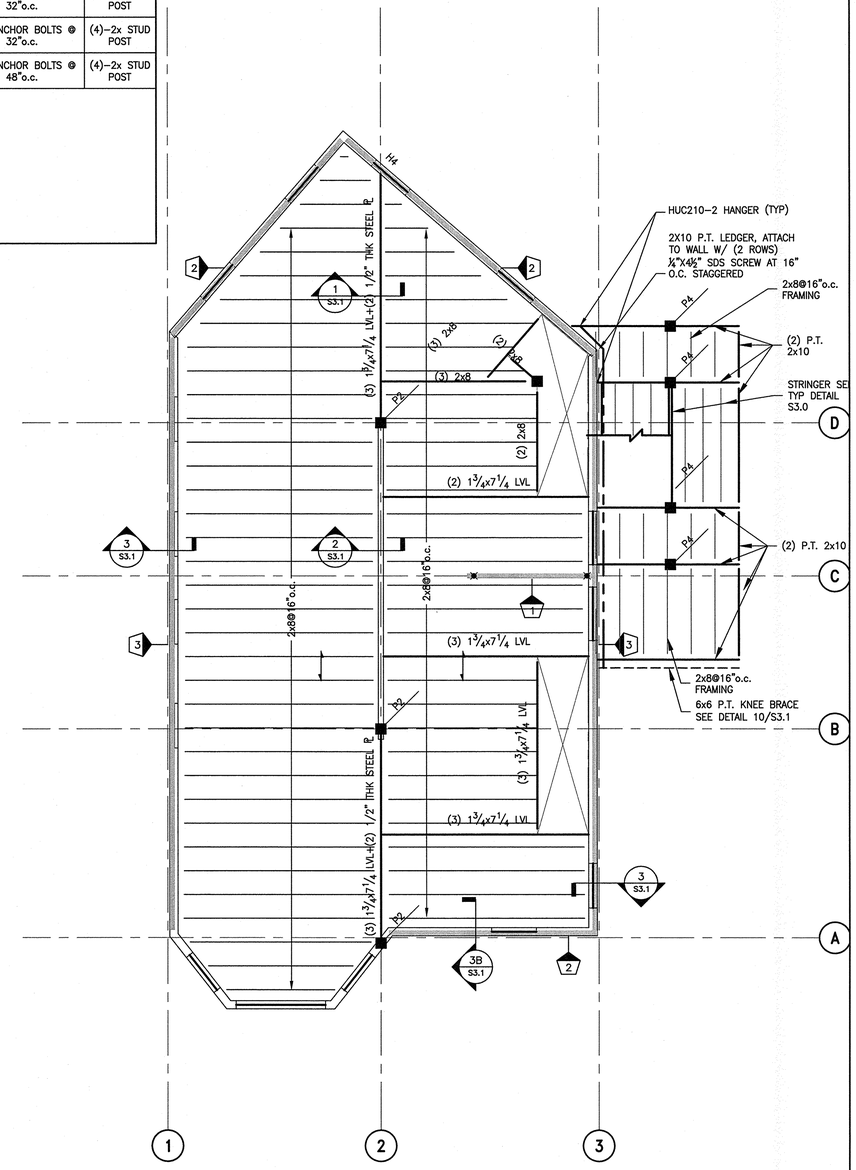

FOURTH FLOOR FRAMING PLAN

SCALE: 1/4"=1'-0"

WOOD HEADER SCHEDULE

MARK	SIZE (WIDTH x DEPTH)	# JACK STUDS	# KING STUDS
H1	(2)–2x6	1	1
H2	(2)–2x10	1	1
H3	(2)–2x12	2	2
H4	(2) 1¾x9¼ LVL	2	2

NOTES:
1. HEADERS SHALL BE DROPPED UNLESS OTHERWISE NOTED AS FLUSH FRAMED.
2. HEADERS SHALL BE FLUSH WITH EXTERIOR FACE OF WALL STUD, SHIM INSIDE FACE WITH 2x OR PLYWOOD AS REQUIRED.
3. JAMB POSTS SHALL BE CONTINUOUS DOWN TO FOUNDATIONS BELOW UNLESS OTHERWISE NOTED.
4. BOX HEADER WIDTH TO BE 3½" AT 2x4 WALLS AND 5½" AT 2x6 WALLS.

PERMIT SET
JUNE 25, 2014 NOT FOR CONSTRUCTION

Copyright 2013 © Thomas F. Moran, Inc.
48 Constitution Drive, Bedford, N.H. 03110

All rights reserved. These plans and materials may not be copied, duplicated, replicated or otherwise reproduced in any form whatsoever without the prior written permission of Thomas F. Moran, Inc.

This plan is not effective unless signed by a duly authorized officer of Thomas F. Moran, Inc.

48 Constitution Drive
Bedford, NH 03110
Phone (603) 472-4488
Fax (603) 472-8747
www.tfmoran.com

TFM Structural Engineers

COMMONWEALTH OF MASSACHUSETTS
THOMAS E. LAMB
STRUCTURAL
NO. 49045
REGISTERED PROFESSIONAL ENGINEER

REV.	DATE	DESCRIPTION	DR	CK

1108–1110 Broadway
SOMERVILLE, MA

PREPARED FOR
JSS REALTY
CLIENT ADDRESS
NORTH READING, MA

JUNE 25, 2014

SCALE: AS SHOWN

CADFILE 1108–1110 BR
DR TEL CK PES
FILE 31472.00

FOURTH FLOOR AND ROOF FRAMING PLAN

S1.2

P:\TFM Projects\31472.00 JSS Realty 1110 Broadway–Somerville, MA\Working Dwgs\1108–1110_Broadway_Structural_Drawings.dwg

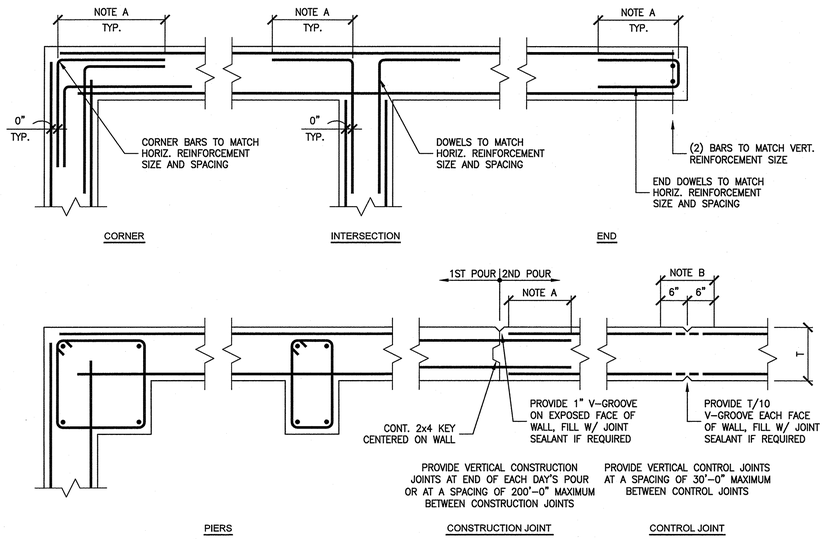

NOTES:
A. PROVIDE CLASS "B" TENSION LAP SPLICE WITH 56 BAR DIAMETERS MINIMUM.
B. AT CONTROL JOINT, INTERRUPT ALTERNATING HORIZONTAL REINFORCEMENT 6" SHORT OF JOINT.

2 TYPICAL CONCRETE WALL DETAILS
NO SCALE

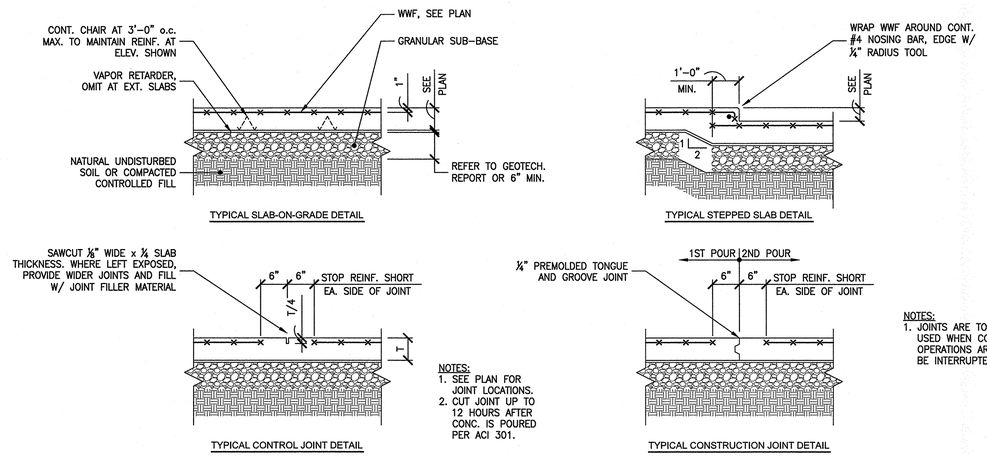

NOTES:
1. SEE PLAN FOR JOINT LOCATIONS.
2. CUT JOINT UP TO 12 HOURS AFTER CONC. IS POURED PER ACI 301.

NOTES:
1. JOINTS ARE TO BE USED WHEN CONC. OPERATIONS ARE TO BE INTERRUPTED.

1 TYPICAL SLAB-ON-GRADE DETAILS
NO SCALE

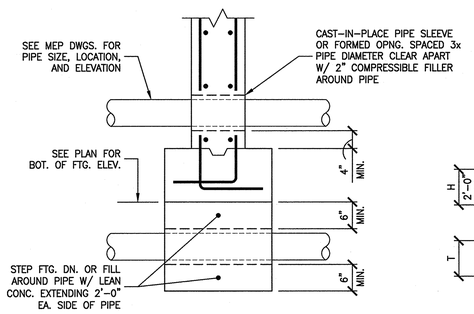

5 TYPICAL PIPE PENETRATION DETAIL
NO SCALE

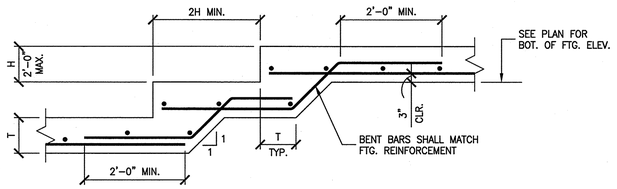

4 TYPICAL STEPPED FOOTING DETAIL
NO SCALE

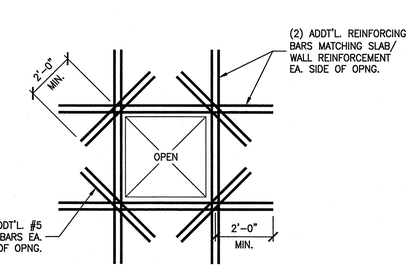

NOTES:
1. THIS DETAIL APPLIES AT ALL OPENING 12"x12" AND LARGER, DETAIL IS SIMILAR AT CIRCULAR OPENINGS 12"ø AND LARGER.
2. COORDINATE ALL OPENING SIZES AND LOCATIONS WITH ARCHITECTURAL AND MEP DRAWINGS.

3 TYPICAL CONCRETE SLAB/ WALL PENETRATION DETAIL
NO SCALE

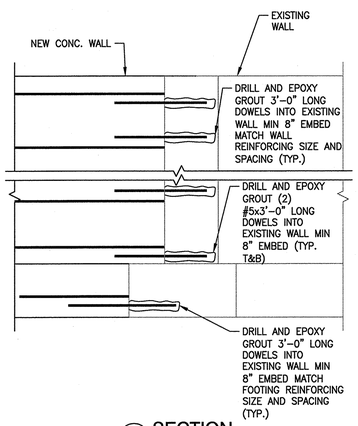

8 SECTION
SCALE: 3/4" = 1'-0"

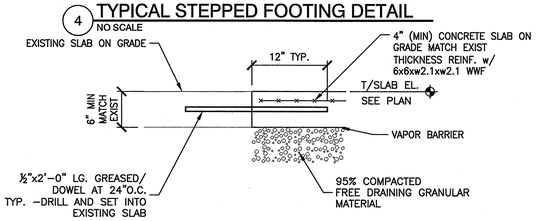

7A TYP. SLAB CONST. JOINT AT EXISTING
SCALE: N.T.S.

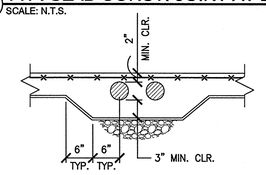

7 TYPICAL PIPE/CONDUIT IN SLAB DETAIL
NO SCALE

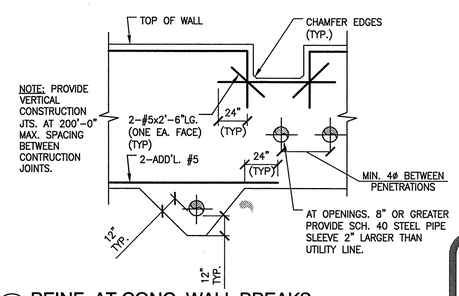

6 REINF. AT CONC. WALL BREAKS
NO SCALE

PERMIT SET
JUNE 25, 2014 NOT FOR CONSTRUCTION

Copyright 2013 © Thomas F. Moran, Inc.
48 Constitution Drive, Bedford, N.H. 03110

All rights reserved. These plans and materials may not be copied, duplicated, replicated or otherwise reproduced in any form whatsoever without the prior written permission of Thomas F. Moran, Inc.

This plan is not effective unless signed by a duly authorized officer of Thomas F. Moran, Inc.

48 Constitution Drive
Bedford, NH 03110
Phone (603) 472-4488
Fax (603) 472-9747
www.tfmoran.com

TFM Structural Engineers

COMMONWEALTH OF MASSACHUSETTS
THOMAS E. LAMB
STRUCTURAL
NO. 49046
REGISTERED PROFESSIONAL ENGINEER
6/24/14

REV.	DATE	DESCRIPTION	DR	CK
A	6/24/14			
B	6/24/14			
C	6/24/14			
D	6/24/14			
E	6/24/14			
F	6/24/14			
G	6/24/14			
H	6/24/14			

1108-1110 Broadway
SOMERVILLE, MA

PREPARED FOR
JSS REALTY
CLIENT ADDRESS
NORTH READING, MA

JUNE 25, 2014
SCALE: AS SHOWN

CADFILE	1108-1110 BR		
DR	TEL	CK	PES
FILE	31472.00		

TYPICAL FOUNDATION DETAILS

S2.0

P:\TFM Projects\31472.00 JSS Realty 1110 Broadway-Somerville, MA\Working Dwgs\1108-1110_Broadway_Structural_Drawings.dwg

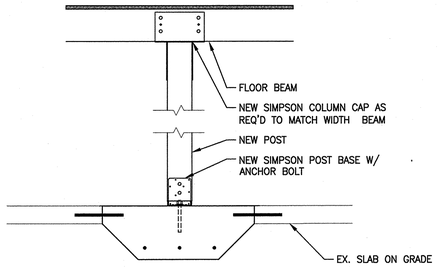

5 SECTION
SCALE: 3/4" = 1'-0"

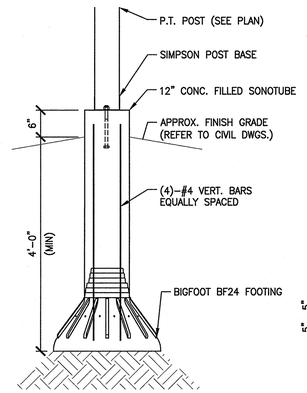

4 SECTION
SCALE: 3/4" = 1'-0"

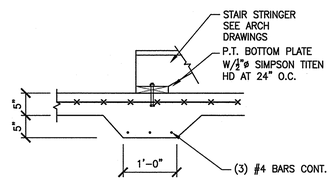

3 SECTION
3/4"=1'-0"

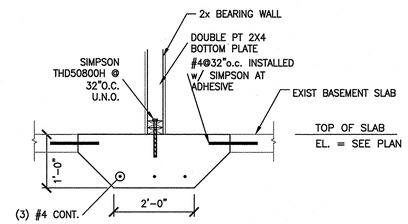

2 SECTION
SCALE: 3/4" = 1'-0"

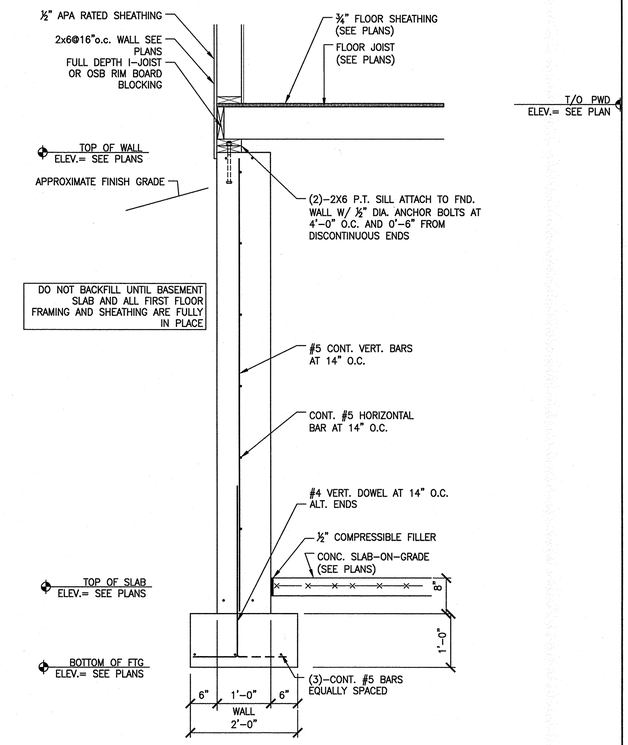

1 SECTION
SCALE: 3/4" = 1'-0"

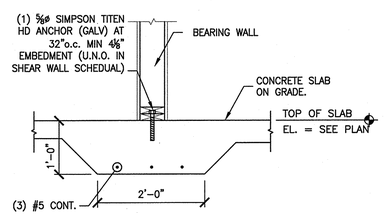

9 THICKEND SLAB AT INT BEARING WALLS
SCALE: 3/4" = 1'-0"

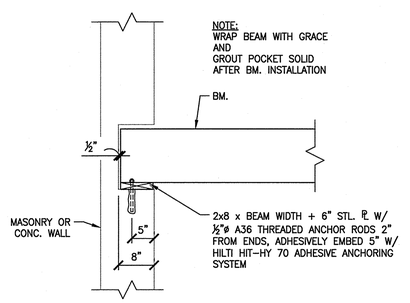

8 TYPICAL BEAM BEARING POCKET DETAIL
NO SCALE

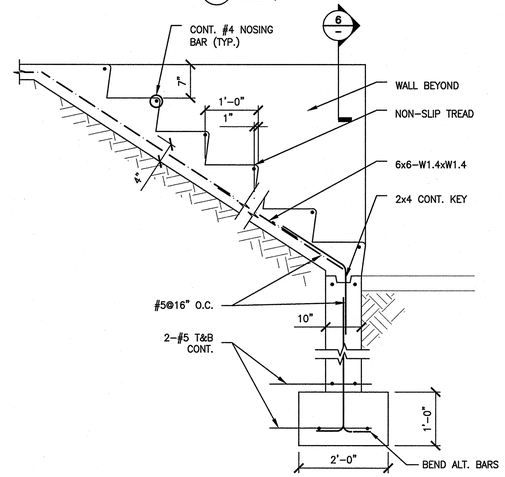

7 STAIR SECTION
SCALE: 3/4"=1'-0"

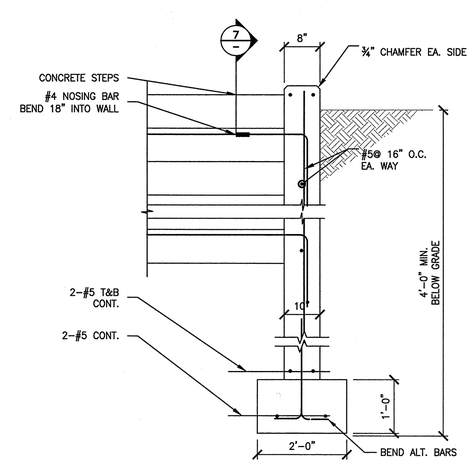

6 STAIR SECTION
SCALE: 3/4"=1'-0"

Copyright 2013 © Thomas F. Moran, Inc.
48 Constitution Drive, Bedford, N.H. 03110

All rights reserved. These plans and materials may not be copied, duplicated, replicated or otherwise reproduced in any form whatsoever without the prior written permission of Thomas F. Moran, Inc.

This plan is not effective unless signed by a duly authorized officer of Thomas F. Moran, Inc.

PERMIT SET
JUNE 25, 2014 NOT FOR CONSTRUCTION

48 Constitution Drive
Bedford, NH 03110
Phone (603) 472-4488
Fax (603) 472-9747
www.tfmoran.com
TFM Structural Engineers

COMMONWEALTH OF MASSACHUSETTS
THOMAS E. LAMB
STRUCTURAL
NO. 49045
REGISTERED PROFESSIONAL ENGINEER
6/25/14

REV.	DATE	DESCRIPTION	DR	CK
A				
B				
C				
D				
E				
F				
G				

1108-1110 Broadway
SOMERVILLE, MA

PREPARED FOR
JSS REALTY
CLIENT ADDRESS
NORTH READING, MA

JUNE 25, 2014

SCALE: AS SHOWN

CADFILE	1108-1110 BR
DR	TEL
CK	PES
PROJ.	31472.00

FOUNDATION DETAILS

S2.1

P:\TFM Projects\31472.00 JSS Realty 1110 Broadway-Somerville, MA\Working Dwgs\1108-1110_Broadway_Structural_Drawings.dwg

STAIR STRINGER SCHEDULE			
SIZE	MAX. SPACING	MAX. SPAN	HANGER
2x12 + 2x4	12"	5'-8"	SIMPSON LSC
2x12 + 2x6	12"	7'-8"	SIMPSON LSC
1¾x11⅞" LVL + 1¾x9½" LVL	12"	10'-8"	SIMPSON LSC
1¾x14" LVL + 1¾x7¼" LVL	12"	14'-6"	SIMPSON LSC

NOTES:
1. STRINGER SIZE SHOWN ASSUMES 11" TREAD AND 8" RISER. PLEASE CONSULT ENGINEER SHOULD ACTUAL VALUES EXCEED THESE.
2. STAIR DESIGN NOT COVERED BY TYPICAL CONTRACT. G.C. TO COORDINATE STAIR CONSTRUCTION, SEE TYPICAL DETAIL.
3. PROVIDE MINIMUM (2) 2x12 RIM JOIST TO ATTACH HANGER, U.N.O IN PLAN.
4. ALL EXTERIOR STRINGERS TO BE PRESSURE TREATED(LVL AND SOLID SAWN LUMBER)

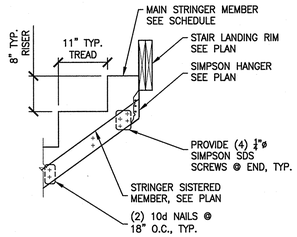

3 TYP. STAIR STRINGER DETAILS
SCALE: 3/4" = 1'-0"

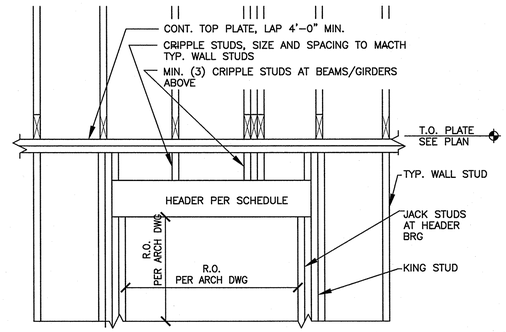

2 TYPICAL HEADER DETAIL
SCALE: 3/4" = 1'-0"

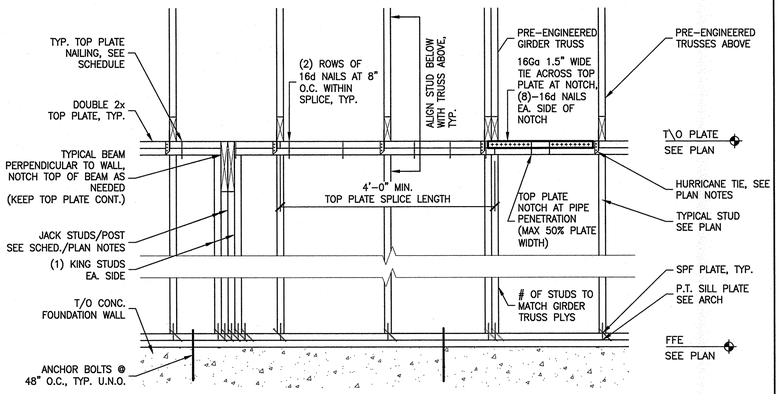

1 TYPICAL WALL SECTION
SCALE: 3/4" = 1'-0"

SHEATHING SCHEDULE:			
LOCATION	TYPE	FASTENING REQUIREMENTS	
		EDGE	FIELD
WALL	⅝", 15/32 APA RATED SHEATHING EXPOSURE 1, BLOCK ALL EDGES	8d@6"o.c. U.N.O.	8d@12"o.c. U.N.O.
FLOOR	¾", 24" SPAN APA RATED STURD-I-FLOOR EXP. 1 T&G SHEATHING	8d@6"o.c.	8d@12"o.c.
ROOF	⅜", APA RATED ROOF SHEATHING MEETING DOC PS1 OR DOC PS2	10d@4"o.c. U.N.O.	10d@6"o.c. U.N.O.

NOTES:
1. MINIMUM FASTENER PENETRATION IN FRAMING SHALL BE 1⅜" TYP., U.N.O.
2. PROVIDE SIMPSON H-CLIPS AT ALL ROOF PANEL EDGES.
3. SEE ALSO SHEAR WALL SCHEDULE FOR REQUIREMENTS EXCEEDING THOSE SHOWN HERE.
4. PROVIDE BLOCKING AT ALL SHEATHING PANEL EDGES. TYPICAL.

NAIL FASTENING SCHEDULE:	
LOCATION	NAILING PATTERN
RIM BOARD TO TRUSS	(1)-8d NAIL TOP & BOTTOM FLANGE
RIM BOARD TO TOP PLATE	TOE-NAIL 8d @ 6"o.c.
ROOF OR FLOOR TRUSS PERPENDICULAR TO TOP PLATE	(1)-10d BOX OR SINKER, EACH SIDE
ROOF OR FLOOR TRUSS PARALLEL TO TOP PLATE	8d TOE-NAILS @6"o.c.
TRUSS BEARING STIFFENERS	(3)-10d NAILS, CLINCH WHERE POSSIBLE
BOTTOM PLATE TO JOIST OR BLOCKING BELOW	(3)-16d NAILS @ 16"o.c. MIN.
BLOCKING TO TOP PLATE BELOW	(3)-8d TOE-NAILS PER BLOCK
PLATE TO STUD, DIRECT	(2)-16d
STUD TO SOLE PLATE	(4)-8d TOE-NAIL OR (2)-16d END NAIL
TOP PLATE LAPS, LAP 48"	(8) 16d FACE NAILS EACH SIDE OF BREAK OF TOP PLATE

NOTE: SEE CMR 780, "FASTENING SCHEDULES" FOR CONNECTIONS NOT SHOWN.

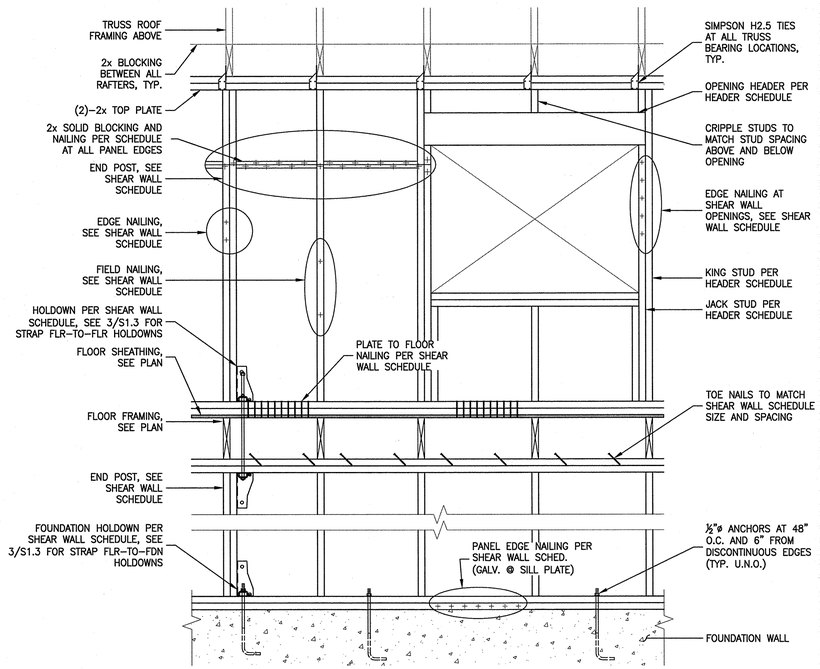

4 TYPICAL SHEAR WALL DETAIL
NO SCALE

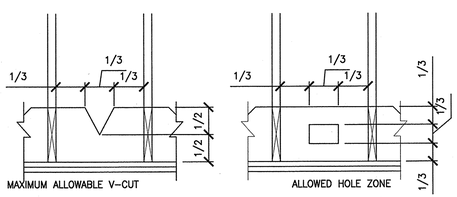

6 ALT. FULL DEPTH BLOCK WITH V-NOTCH DETAIL
SCALE: 3/4" = 1'-0"

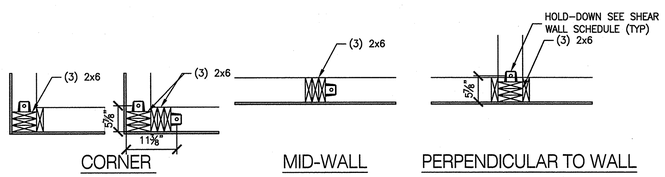

5 TYPICAL HOLD DOWN PLAN
SCALE: 3/4"=1'-0"

Copyright 2013 © Thomas F. Moran, Inc.
48 Constitution Drive, Bedford, N.H. 03110

All rights reserved. These plans and materials may not be copied, duplicated, replicated or otherwise reproduced in any form whatsoever without the prior written permission of Thomas F. Moran, Inc.

This plan is not effective unless signed by a duly authorized officer of Thomas F. Moran, Inc.

PERMIT SET
JUNE 25, 2014 NOT FOR CONSTRUCTION

48 Constitution Drive
Bedford, NH 03110
Phone (603) 472-4488
Fax (603) 472-9747
www.tfmoran.com

TFM Structural Engineers

COMMONWEALTH OF MASSACHUSETTS
THOMAS E. LAMB
STRUCTURAL
NO. 49045
REGISTERED PROFESSIONAL ENGINEER

REV.	DATE	DESCRIPTION	DR	CK
A				
B				
C				
D				
E				
F				
G				
H				

1108-1110 Broadway
SOMERVILLE, MA

PREPARED FOR
JSS REALTY
CLIENT ADDRESS
NORTH READING, MA

JUNE 25, 2014
SCALE: AS SHOWN

CADFILE	1108-1110 BR
DR TEL	CK PES
PROJ. #	31472.00

TYPICAL FRAMING DETAILS

S3.0

P:\TFM Projects\31472.00 JSS Realty 1110 Broadway-Somerville, MA\Working Dwgs\1108-1110_Broadway_Structural_Drawings.dwg

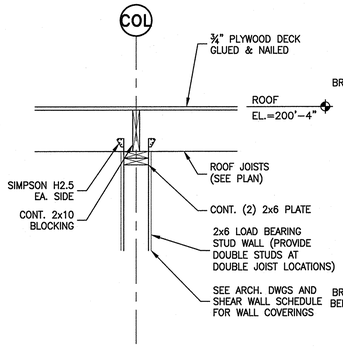

4 SECTION
SCALE: 3/4"=1'-0"

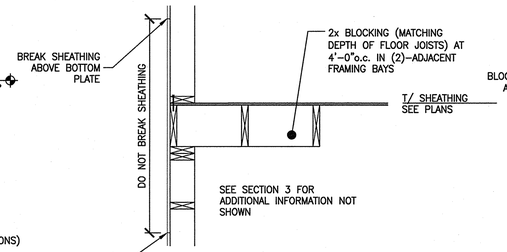

3B SECTION
SCALE: 3/4"=1'-0"

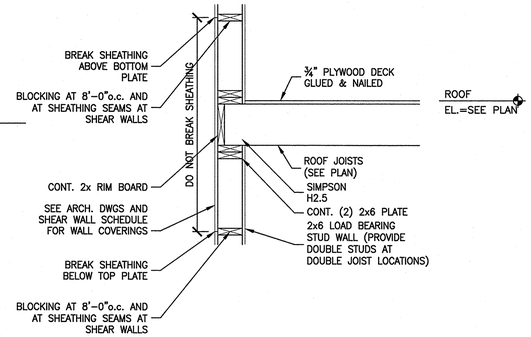

3 SECTION
SCALE: 3/4"=1'-0"

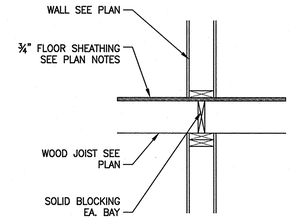

2 SECTION
SCALE: 3/4"=1'-0"

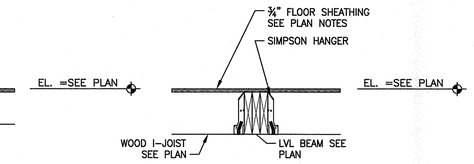

1 SECTION
SCALE: 3/4"=1'-0"

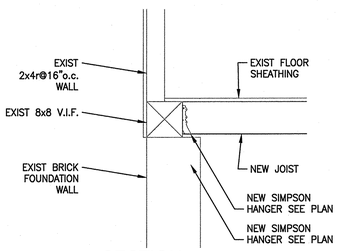

8 SECTION
SCALE: 3/4" = 1'-0"

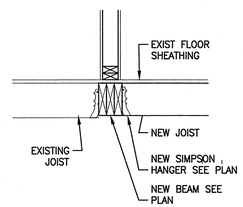

7 SECTION
SCALE: 3/4" = 1'-0"

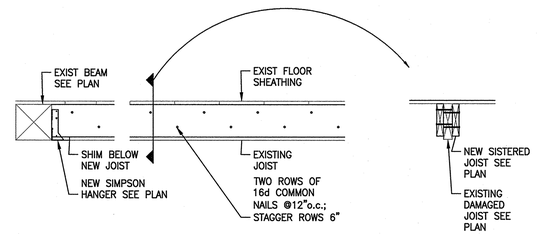

6 TYP SISTERED JOIST
SCALE: 3/4" = 1'-0"

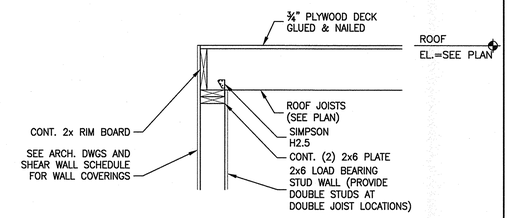

5 SECTION
SCALE: 3/4"=1'-0"

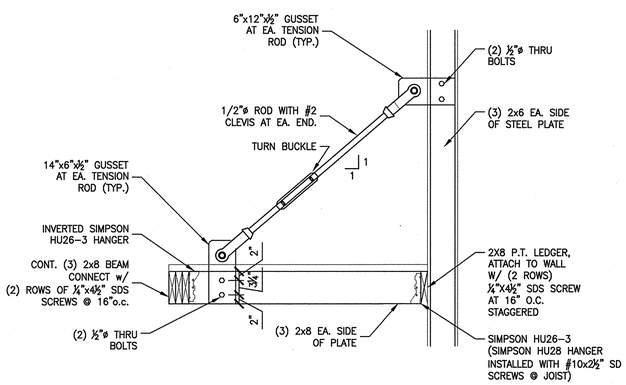

11 TYP CANOPY SECTION
SCALE: 3/4" = 1'-0"

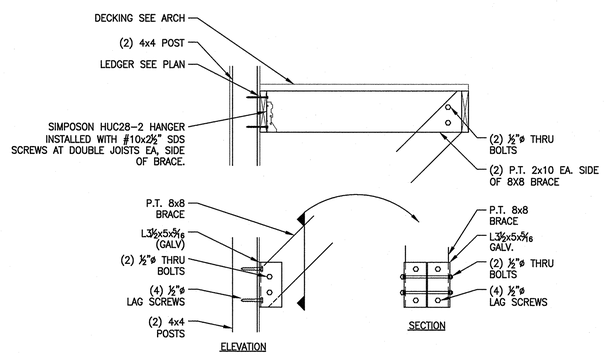

10 TYP KNEE BRACE
SCALE: 3/4" = 1'-0"

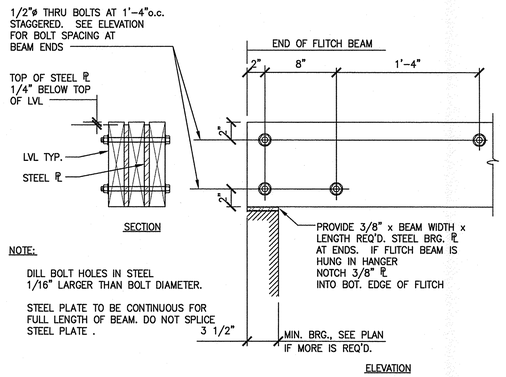

NOTE:

DILL BOLT HOLES IN STEEL 1/16" LARGER THAN BOLT DIAMETER.

STEEL PLATE TO BE CONTINUOUS FOR FULL LENGTH OF BEAM. DO NOT SPLICE STEEL PLATE .

9 TYPICAL FLITCH BEAM
SCALE: N.T.S.

Copyright 2013 © Thomas F. Moran, Inc.
48 Constitution Drive, Bedford, N.H. 03110

All rights reserved. These plans and materials may not be copied, duplicated, replicated or otherwise reproduced in any form whatsoever without the prior written permission of Thomas F. Moran, Inc.

This plan is not effective unless signed by a duly authorized officer of Thomas F. Moran, Inc.

PERMIT SET
JUNE 25, 2014 NOT FOR CONSTRUCTION

48 Constitution Drive
Bedford, NH 03110
Phone (603) 472-4488
Fax (603) 472-9747
www.tfmoran.com

TFM Structural Engineers

COMMONWEALTH OF MASSACHUSETTS
THOMAS E. LAMB
STRUCTURAL
NO. 49045
REGISTERED PROFESSIONAL ENGINEER
6/25/14

REV.	DATE	DESCRIPTION	DR	CK
A				
B				
C				
D				
E				
F				
G				
H				

1108-1110 Broadway
SOMERVILLE, MA

PREPARED FOR
JSS REALTY
CLIENT ADDRESS
NORTH READING, MA

JUNE 25, 2014

SCALE: AS SHOWN

CADFILE	1108-1110 BR
DR	TEL
CK	PES
FILE	31472.00

FRAMING DETAILS

S3.1

P:\TFM Projects\31472.00 JSS Realty 1110 Broadway-Somerville, MA\Working Dwgs\1108-1110_Broadway_Structural_Drawings.dwg

GENERAL NOTES:

SPRINKLER SYSTEM IS HYDRAULICALLY DESIGNED PER NFPA 13R 2013 EDITION. **REMOTE AREA 1** IS DESIGNED FOR A LIGHT HAZARD OCCUPANCY AND IS WET PIPE HYDRAULICALLY CALCULATED TO A DENSITY OF .10 GPM OVER 2 SPRINKLERS, ALLOWABLE PER MSBC CHAPTER 9 FOR A 3 FAMILY TO BE 13D CALCULATED WITH A FLOW DURATION OF 20 MINUTES, PER VIKING RESIDENTIAL PENDENT SPECS FOR 16'x16' SPACING WITH A MINIMUM FLOW OF 13 GPM AT 7 PSI.

ALL MATERIALS USED ARE TO BE UL LISTED AND COMPLY WITH NFPA13R (2013 EDITION) AND THE MASSACHUSETTS STATE BUILDING CODE (8TH EDITION).

THE DRAWING BACKGROUND, INCLUDING WALL AND DOOR LOCATIONS HAVE BEEN PROVIDED BY OTHERS. ACCURACY OF WALL LOCATIONS AND DIMENSIONS SHALL BE FIELD VERIFIED BY THE CONTRACTOR WITH REGARDS TO PIPE ROUTING AND PROXIMITY TO OBSTRUCTIONS.

THE SCOPE OF WORK IS TO SPRINKLER A BUILDING WITH A SINGLE OCCUPANCY CLASSIFICATION.

OWNER IS REQUIRED TO PROVIDE TEMPERATURE OF 40°F MINIMUM FOR ALL AREAS PROTECTED WITH A WET PIPE SPRINKLER SYSTEM. THE SYSTEM IS TO BE MAINTAINED BY THE OWNER AS REQUIRED BY NFPA-25.

STRUCTURAL LOAD BEARING ANALYSIS IS NOT INCLUDED WITHIN THE SCOPE OF THE SPRINKLER INSTALLATION.

ELECTRICAL OR ALARM WIRING OF DEVICES PROVIDED UNDER THE SPRINKLER SCOPE IS TO BE DONE BY OTHERS IN ACCORDANCE WITH NFPA72 - LATEST EDITION.

PIPING IS TO BE SUPPORTED AS REQUIRED BY NFPA-13R. HANGERS ARE TO BE FIELD LOCATED TO BEST SUPPORT THE PIPE.

ALL PIPING ON RESIDENTIAL LEVELS TO BE UL/FM LISTED AND APPROVED CPVC WITH CPVC FITTINGS AND HANGERS.

ELEVATIONS ARE TO CENTERLINE OF PIPE ABOVE THE FINISHED FLOOR.

ALL DIMENSIONS ARE CENTER TO CENTER.

RESIDENTIAL SPRINKLERS SHALL MEET THE OBSTRUCTION RULES ON NFPA 13R, 2013 EDITION.

MAXIMUM RESIDENTIAL PENDENT SPRINKLER SPACING IS 16' x 16'

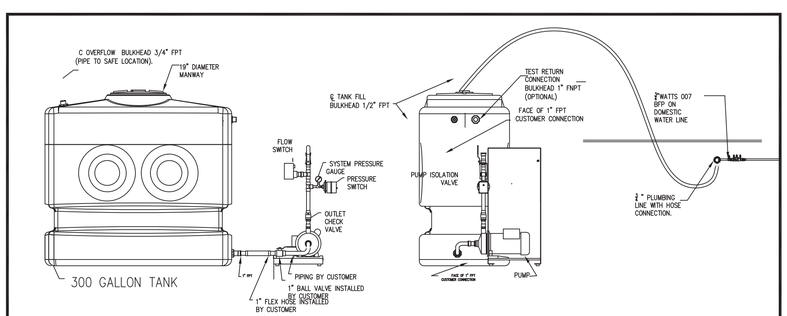

GOULD GT15 RESIDENTIAL FIRE PUMP

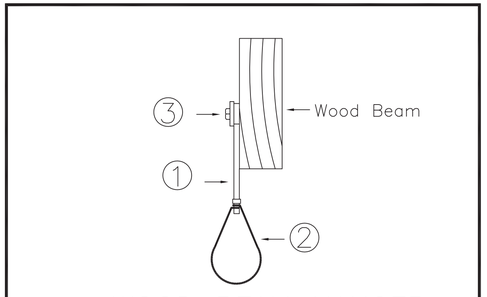

WOOD BEAM HANGER
HANGER CODE #5

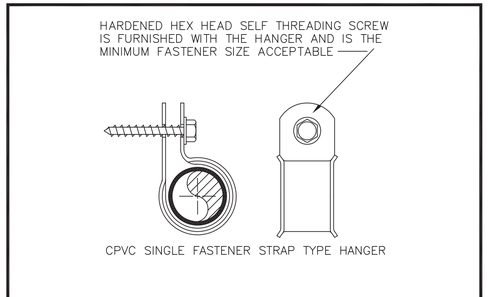

CPVC HANGER
HANGER CODE #27

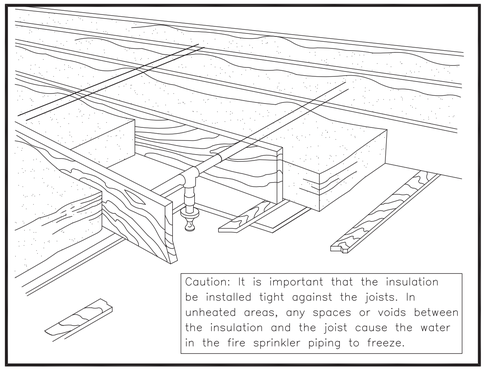

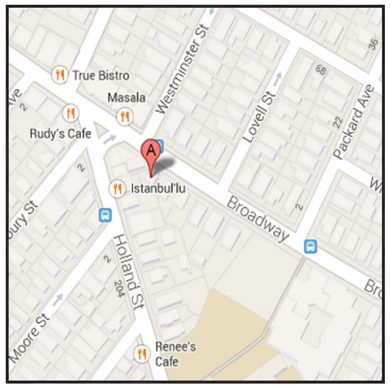

FIRE ALARM LEGEND

2P	PHOTOELECTRIC SYSTEM SMOKE DETECTOR
2E	110V ELEC. SMOKE/HEAT INTERCONNECT TO LOCAL UNIT
	SPEAKER STROBE NOTIFIER SPECTRALERT
P	MANUAL PULL STATION NOTIFIER BNG BRG SERIES
	MINI SOUNDER TEMPORAL 3 NOTIFIER E SERIES
	ADA STROBE
C/O	CARBON MONOXIDE DETECTOR
B	OUTDOOR LOCATOR BEACON
T/S	TAMPER SWITCH POTTER
F/S	FLOW SWITCH POTTER
FACP	FIRE ALARM CONTROL PANEL NOTIFIER

FIRE ALARM PANEL

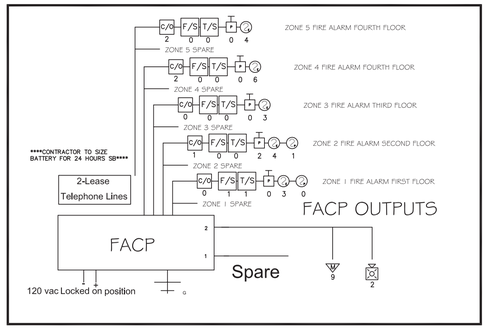

SYM	CNT	POSITION	FINISH	TEMP	K	NPT	SIN	MFG.	MODEL#
	49	PEND	WHITE	165	4.90	1/2"	VK457	VIKING	VK457
DRY	2	SIDE	CHROME	200	5.60	1"	VK178	VIKING	VK178

PROMETHEUS LIFE SAFETY
53 ASH AVE.
SOMERVILLE, MA 02145
PHONE:(617)-633-3533

NO	DATE	BY	REVISION

COMMONWEALTH OF MASSACHUSETTS
JASON CATALFO KAHAN
FIRE PROTECTION
NO: 45388
REGISTERED PROFESSIONAL ENGINEER
06.19.14

PROJECT NAME – SOMERVILLE THREE FAMILY
PROJECT ADDRESS – 1108-1110 BROADWAY SOMERVILLE, MA
SHEET TITLE – DETAIL SHEET

PROJECT NO.
DATE 06.19.14
SCALE N.T.S
DRAWN BY JK
CHECKED BY JK

FP 0.1

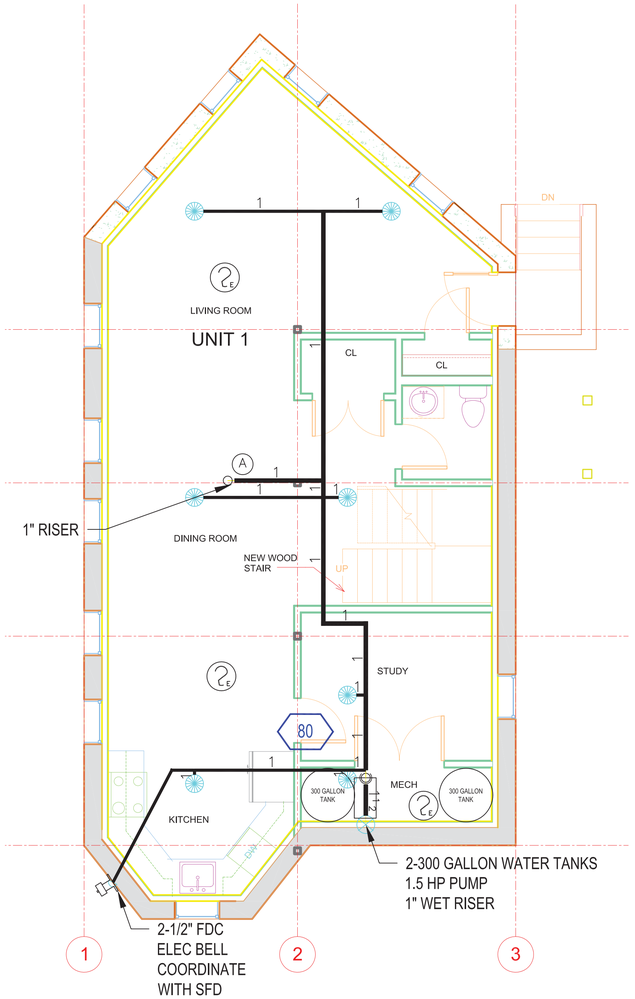

BASEMENT PLAN
SCALE: 1/4" = 1'-0"

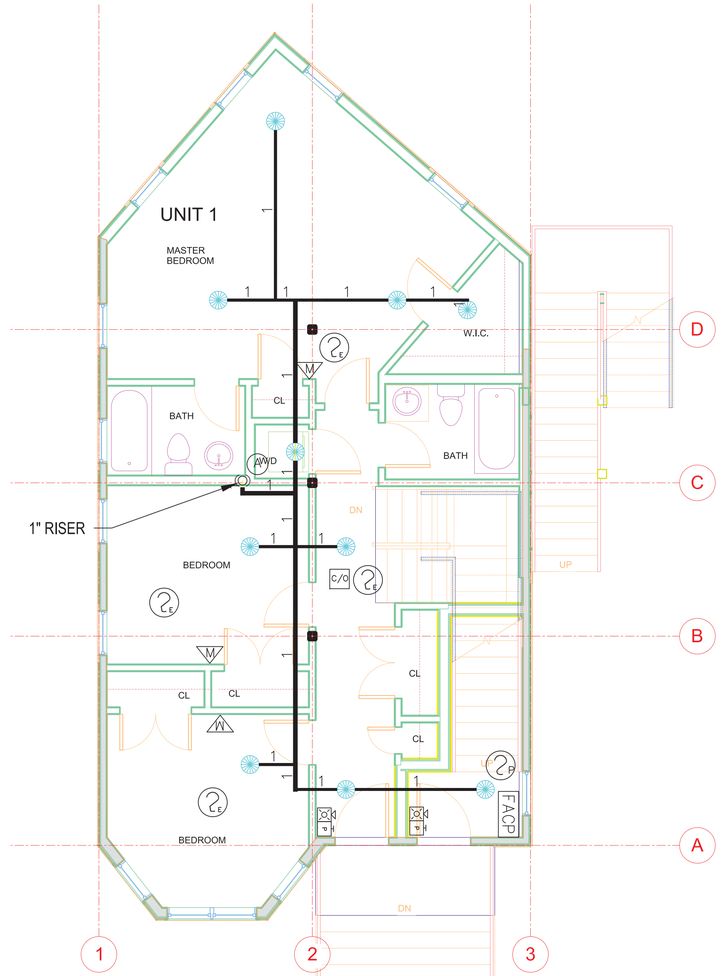

FIRST FLOOR PLAN
SCALE: 1/4" = 1'-0"

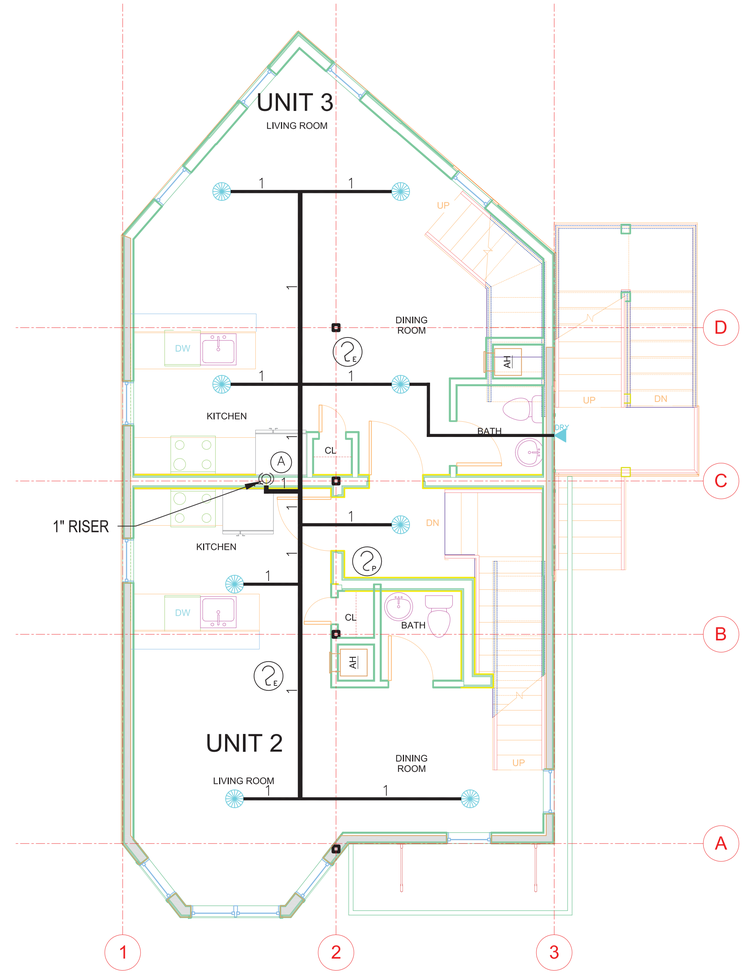

SECOND FLOOR PLAN
SCALE: 1/4" = 1'-0"

PROMETHEUS LIFE SAFETY
53 ASH AVE.
SOMERVILLE, MA 02145
PHONE:(617)-633-3533

NO	DATE	BY	REVISION

COMMONWEALTH OF MASSACHUSETTS
JASON CATALFO KAHAN
FIRE PROTECTION
NO. 48388
REGISTERED PROFESSIONAL ENGINEER
06.19.14

PROJECT NAME: - SOMERVILLE THREE FAMILY
PROJECT ADDRESS: - 1108-1110 BROADWAY SOMERVILLE, MA
SHEET TITLE: - BASEMENT-SECOND FLOOR FP PLANS

PROJECT NO.
DATE: 06.19.14
SCALE: 1/4" =1'-0"
DRAWN BY: JK
CHECKED BY: JK

FP 1.0

Calculation results for Design Area 1 - TOP FLOOR

This system as shown on _____ company print no _____ dated 6/19/14
for SOMERVILLE THREE FAMILY at 1108-1110 BROADWAY
contract no _____ is designed to discharge at a rate of 0.1 gpm/ft² (L/min/m²) of floor area over
a maximum area of 260 ft² when supplied with water at a rate of 26.1 gpm at 40.9 psi at the base of the riser.
Hose stream allowance of _____ is included in the above.

Occupancy classification: RESIDENTIAL
Commodity classification: _____
Maximum storage height: _____
Storage arrangement: _____

Number of heads flowing: 2
System Type: Wet
Maximum velocity: 8.78 ft/s

Flow from In-Rack sprinklers:	0 gpm
Flow from Overhead sprinklers:	26.1 gpm
Flow from Inside Hoses:	0 gpm
Flow from Outside Hoses:	0 gpm
Other fixed flows:	0 gpm
Total flow in system piping:	26.1 gpm
Additional flow at/beyond source:	0 gpm
Total of all flows:	26.1 gpm

Pressure Required at Source:	40.9 psi
Pressure Available at Source:	46.4 psi
Surplus Pressure at Source:	5.4 psi

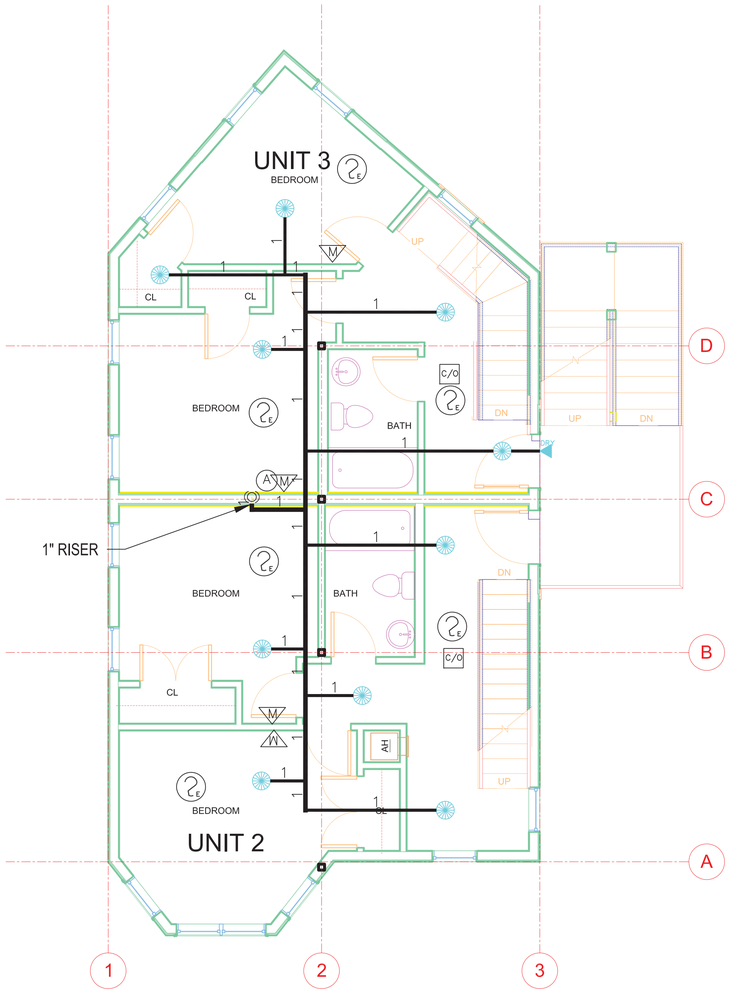

THIRD FLOOR PLAN
SCALE: 1/4" = 1'-0"

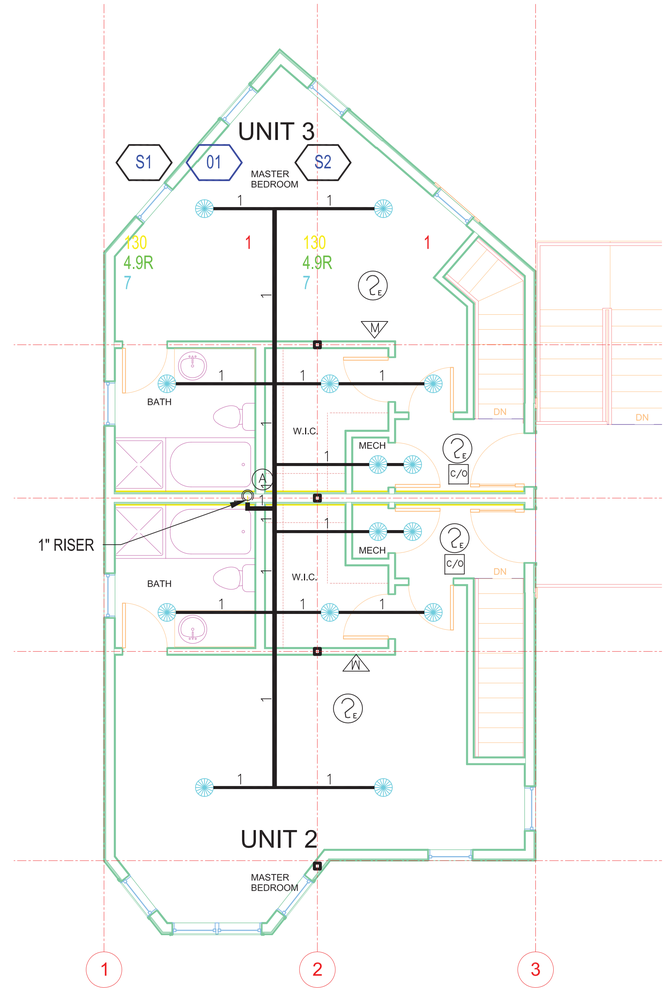

FOURTH FLOOR PLAN
SCALE: 1/4" = 1'-0"

PROMETHEUS LIFE SAFETY
53 ASH AVE.
SOMERVILLE, MA 02145
PHONE:(617)-633-3533

NO	DATE	BY	REVISION

COMMONWEALTH OF MASSACHUSETTS
JASON CATALFO KAHAN
FIRE PROTECTION
NO. 48388
REGISTERED PROFESSIONAL ENGINEER
06.19.14

PROJECT NAME - SOMERVILLE THREE FAMILY
PROJECT ADDRESS - 1108-1110 BROADWAY SOMERVILLE, MA
SHEET TITLE - THIRD & FOURTH FLOOR FP PLANS

PROJECT NO.
DATE 06.19.14
SCALE 1/4" = 1'-0"
DRAWN BY JK
CHECKED BY JK

FP 1.1